UKRAINIAN DEFENSE REVIEW

UDR

№3 [JULY-SEPTEMBER 2013]

Defense express

THE FIRST TO GO

NEW MBT OPLOT

FOR THAI ROLLED OUT OF THE PLANT

80K6M

MOBILITY, VERSATILITY, COMPETITIVENESS

UKRAINIAN-BELGIAN TANDEM

SDB "Luch" and CMI Defence fruitful cooperation

SEA BATTLE

Overview of new Ukrainian missile/gun weapons systems

SURVIVE ON THE BATTLEFIELD

National ERA and APS technologies for AFV

UkrOboronProm

The State Concern

State Concern "Ukroboronprom" is the state owned holding company for 134 enterprises of Ukrainian defense industry.

Main goals of "Ukroboronprom" are improving the state management system of Ukrainian defense industry, enhancing the effectiveness of activity and controlling the operations of enterprises of the Ukrainian defense industry, development of new types of Ukrainian armament and enlargement of products markets.

The activities of the Ukroboronprom's enterprises cover the areas of aircraft industry and air defence, tanks and armored vehicles, shipbuilding and naval engineering, radar systems, weapon ordnance and communications, missiles and ammunition production.

"Ukroboronprom" is a reliable partner in the sphere of military-technical cooperation for more than 80 foreign countries.

For more information you may visit our web-portal
www.ukroboronprom.com.ua

Contacts:
State Concern "Ukroboronprom"
36, Dehtiarivska St.,
Kyiv, 04119, Ukraine
Tel.: +380 44 4584681
Fax: +380 44 5862477

[table of contents]

in the focus

UKRAINIAN DEFENSE REVIEW ARMS EXPORT AND DEFENSE INDUSTRIAL COMPLEX OF UKRAINE

SERHIY ZGURETS – Head & Editor-in-Chief Defense Express Media & Consulting Company, zgurets@gmail.com, **VALERII RIABYKH** – Director of Development Defense Express Media & Consulting Company, defence_2@meta.ua, **VOLODYMYR KOPCHAK** – Deputy Director – Editor of «Arms export and defense industry of Ukraine» Magazine, v_kopchak@mail.ru, **ANTON MIKHNENKO** – Deputy Director – Editor of «Ukrainian Defense Review» Magazine, mikhnenko_av@ukr.net, **MYKHAILO SAMUS** – The Head of Defense Express Media & Consulting Company European Bureau (Prague, Czech Republic), **DMITRY BOGDANOV, OLGA NABOCHENKO** – expert-observer, **MARK KANARSKY** – Art Director, **ANDRIY KRAMAR** – Commercial Director, **SERGEY POPSUEVICH** – Photographer, **JANNA DYOMINA** – Translator

OUR ADDRESS

10 Illinska Str, off.5,
Kyiv, Ukraine, 04070
Phone: +38 (044) 425-42-10,
+38 (044) 425-16-22
ukr.defense.news@gmail.com

In cooperation with:

CENTER FOR ARMY CONVERSION & DISARMAMENT STUDIES

Founder & Director – **Valentyn BADRAK**

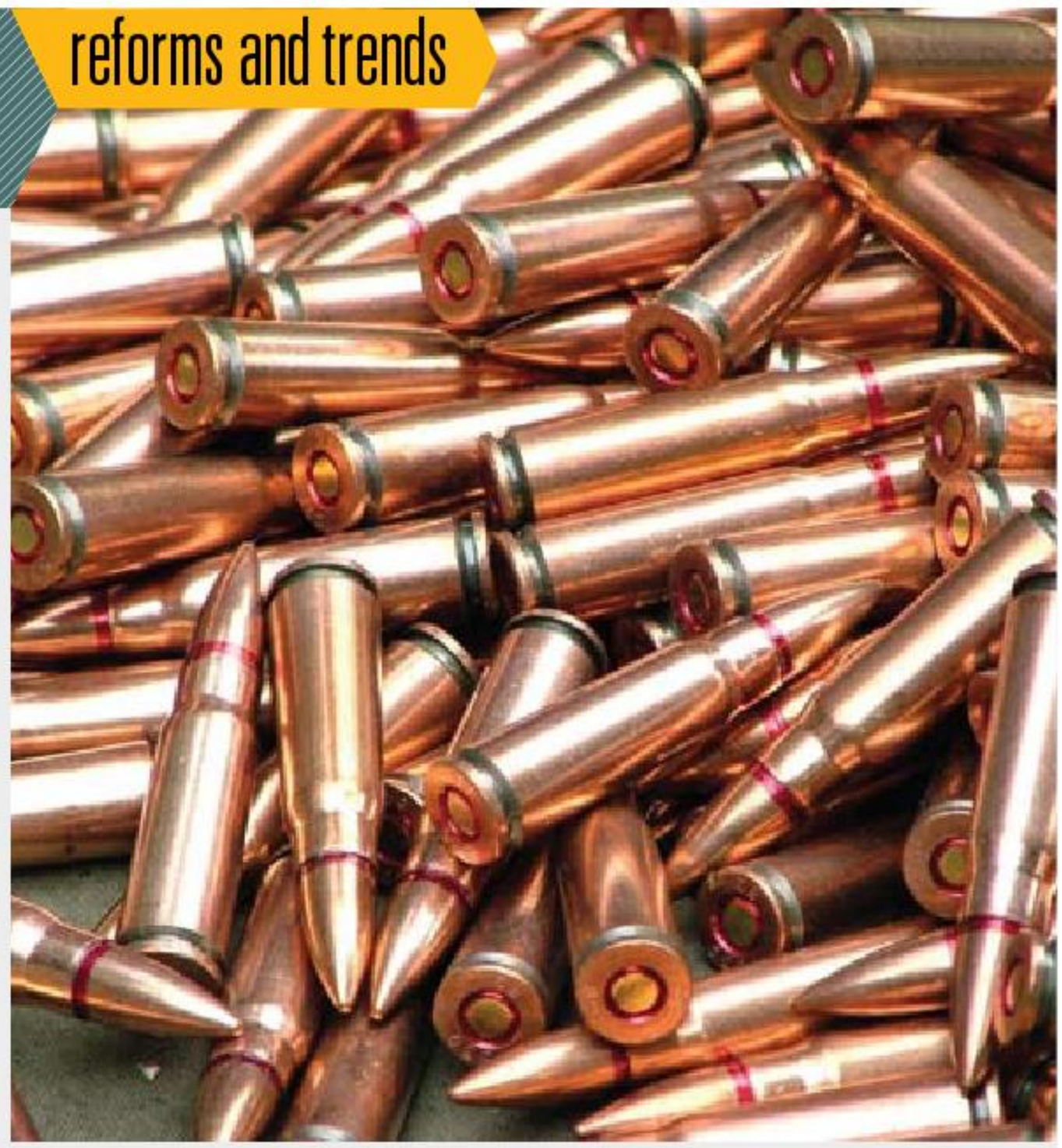

RESULTS OF UKRAINE DEFENSE EXPORTS IN 2012

The State Service on Export Control of Ukraine, on July 16, 2013, published an annual report on the international transfers of selected types of armaments and military equipment carried out by Ukraine during 2012. The report included the international transfers as follows:

- **Battle tanks:** Sudan (10 T-72 tanks), Ethiopia (99 T-72 tanks).
- **Armored fighting vehicles:** Azerbaijan (14 BTS-5Bs), Bulgaria (10 BTR-60PBs, 9 BTR-70s), Iraq (40 BTR-4s, 8 BTR-4Ks, 9 BTR-80UP-KRs, 2 BTR-80UP-Rs), Thailand (62 BTR-3E1s, 4 BTR-3Ks, 9 BTR-3M1s, 3 BTR-3Cs, 5 BTR-3BRs), Sudan (1 BTR-70, 14 BMP-1s)
- **Large caliber artillery systems:** Sudan (11 2S1 "Gvozdika"), Turkmenistan (6 2A36 "Hyacinth")
- **Combat Aircraft:** Estonia (5 L-39s), Democratic Republic of the Congo (2 Su-25s)
- **Attack helicopters:** Lithuania (1 Mi-24R)
- **Missiles and missile launchers:** Russian Federation (4 units), Algeria (37 units), Kazakhstan (6 units).

SMALL ARMS AND LIGHT WEAPONS, MAN-PORTABLE AIR DEFENSE SYSTEMS

1. Small arms

- **Revolvers and pistols:** Germany (14,426 units), Czech Republic (538), Sri Lanka (11), Pakistan (7,000), Turkmenistan (1).
- **Rifles and carbines:** Germany (14,395 units), the USA (90,000), Canada (11,000), Czech Republic (1,502), Kazakhstan (260), China (1), Czech Republic (7,280), Israel (2,000), Chad (15,000), Kenya (3,000), Sudan (22,000).
- **Light machine guns:** Austria (215 units), Republic of Turkey (250), Czech Republic (75), Thailand (1).

2. Light weapons

- **Heavy machine guns:** Kenya (43 units)
- **Hand-held, underslung and mounted grenade launchers,** USA (11 units)
- **Man portable anti-tank systems:** Sudan (29 units)
- **Recoilless guns:** Sudan (80 units)
- **Man portable anti-tank missiles and launchers:** Israel (120 missiles), Israel (16 launchers), Azerbaijan (3), Serbia (85 missiles), Serbia (14 launchers)
- **Mortars of a caliber less than 75 mm:** Kenya (50 units)

3. Man portable air defense systems

- **Missile launchers:** United States (22 units), Israel (32), Italy (4), Botswana (20), Sweden (1).
- **Man portable air defense missiles:** U.S.A. (137 units), Israel (193).

UKROBORONPROM IMPROVES FINANCIAL PERFORMANCE

The State-run Ukroboronrom defense industry holding improved its financial performance year-on-year in H1 2013. The Company earned a net profit of UAH 410 million (USD 51.25 million) over January-June 2013, after a UAH 97.6 million (USD 12.2 million) loss a year earlier, Serhiy Hromov, CEO at Ukroboronprom said on August 6.

All enterprises that are part of the State-run holding improved their financial performance over the period under review, with highest profit growth rates seen at companies of the shipbuilding and aircraft sectors as well as state arms dealers, Hromov said.

"The aggregate profit of shipbuilding and marine hardware producers grew from UAH 35 million (USD 4.3 million) in the first six months of 2012 to UAH 221 million (USD 27.6 million) year-on-year in 2013," Ukroboronprom's press service quoted Hromov as saying.

Aircraft industry enterprises increased their profits from UAH 80 million to UAH 143 million (USD 17.8 million). Profits of Ukraine's state arms dealers rose from UAH 44 million to UAH 64 million (USD 8 million), he said.

The producers of radars, air defense systems, missile/gun systems and communication equipment also managed to overcome the crisis over the year and chalked up an aggregate profit of UAH 7.5 million in January-June 2013, compared with a loss of UAH 62 million in the earlier half of 2012, he said.

Companies producing armored military vehicles, engineering and special-purpose equipment reduced their losses considerably in the period under review – from UAH 173 million (USD 21.6 million) in H1 2012 to UAH 17 million (USD 2.1 million) year-over-year in 2013, and rocket and munitions producers reduced their losses from UAH 22 million (USD 2.75 million) to UAH 11 million (USD 1.37 million), the CEO of Ukroboronprom said.

UKRAINE, TURKEY NEGOTIATE OVER JOINT DEVELOPMENT OF AIRCRAFT

State Company 'Antonov' and Turkey based corporation 'Turkish Aerospace Industries' (TAI) are negotiating a project to jointly build an aircraft based on the An-158 design, Dmytro Kiva, President and Chief Designer of 'Antonov' said. "This is going to be an upgraded airplane with enhanced performance capabilities," Kiva told a press conference during the 50th Paris Air Show at Le Bourget.

MOTOR SICH WILL EXPORT 40 AI-222-25F ENGINES TO CHINA ANNUALLY

The PJSC "Motor Sich" intends to export 40 AI-222-25F engines to China every year, AviaPort has quoted Vyacheslav Bohuslayev, President Emeritus of Motor Sich, as saying.

AI-222-25F is a supercharged variant of the AI-222-25 engine that was originally designed to equip China's indigenous L-15 trainer aircraft.

The AI-222-25 engine powers the Russian Yak-130 trainer aircraft, said Bohuslayev. As previously reported by Volodymyr Semynozhenko, the head of the State Agency for Science, Innovation and Electronic Communication Development, the Chinese contract will be worth an aggregate of about USD 5.7 billion and is planned for completion in 2041. According to available information, Zambia's Air Force has contracted China to manufacture and supply six L-15 trainers.

AN-178 CAN ENTER PRODUCTION IN 2014

Production of the An-178 cargo aircraft could be launched in 2014, Volodymyr Derliuk, an adviser to the CEO of Kharkiv's FED Machinery Plant, said as reported by UNN on July 30, 2013.

"The An-178 aircraft has not been in production yet...I expect that, under favorable conditions, production of the aircraft at State-run Antonov Enterprise could be launched in 2014, just when we will start production of assemblies and subsystems for this type of aircraft," Derliuk said.

MOTOR SICH TO LAUNCH PRODUCTION OF MSB-2 HELICOPTERS IN 2013

Motor Sich will launch production of MSB-2 helicopters in 2013, a press officer for State Company Ukrspecexport told UNN on 10th August 2013.

Production of MSB-2 helicopters will be funded with government assured loans and otherwise sourced money worth an aggregate UAH 109.4 million, according to the press officer.

In addition, the Company will develop a future rotorcraft in the 5-6t maximum takeoff mass category and will join forces with Ivchenko-Progress State Enterprise to produce the AI-28 turbojet engine intended to power prospective models of aircraft, including the An-148 family of short-range turbojets.

The MSB-2 helicopter and AI-28 engine will require an aggregate UAH 632.6 million in funding for completion and production set-up.

UKRAINE STARTS EXPORT OF AIR-LAUNCHED MISSILES TO INDIA'S MOD

The State-run Artem joint stock holding company has sent the initial consignment of R-27 medium-range air-to-air missiles produced for the Indian Air Force to the Customer, Serhiy Hromov, the CEO at the Ukroboronprom State Concern reported on 4th August 2013.

"The first batch of the missiles has been shipped to the Customer, and the next batch – two thirds of which has been assembled and kept at a filling facility -- is being prepared for delivery. We are confident that the Company will continue to operate smoothly," Hromov said.

Artem signed a contract with the Defense Ministry of India to supply R-27 missiles to the Indian Air Force in March 2012. The contract, worth some $250 million, is to run from 2012 to 2013. Under the terms of the contract, the initial number of air-launched missiles was to be shipped to the Customer in the third Quarter 2012.

Artem is the monopoly CIS producer of medium-range air-to-air missiles (R-27IF) of different configurations used in all types of Russian-built fighters of the MiG-29, Su-27 and Su-30 series.

ARSENAL DESIGN BUREAU TO LAUNCH PRODUCTION OF ENHANCED MISSILE SEEKERS

State-run special apparatus production firm "Arsenal" based in Kyiv intends to launch production of new seeker heads for air-to-air missiles, the Ministry for Economic Development and Commerce reported on its website.

Production of the new seeker head, the IS-90, will be launched as part of an investment project worth UAH 357.297 million (USD 44.66 million).

The investment project includes pre-production and initial production of an IR homing guidance seeker for short-range air-to-air missiles. The seeker will integrate a multi-element light sensor system, new algorithms for digital data handling, new engineering solutions and current-generation hardware components. It is anticipated that the project timeframe will cover three years, from 2013 to 2016.

ANTONOV TO COMPETE IN INDIA'S TENDER FOR THE REPLACEMENT OF 748M AVRO AIRCRAFTS

State Company 'Antonov' is to bid for the tender for the production of 56 medium range transport aircrafts to replace aging fleet of Hawker Siddeley 748M Avro aircrafts of the Indian Air Forces.

A statement to this effect was made by Dmytro Kiva, Chief Designer of SC 'Antonov' at a press-conference on the sidelines of the Paris Air Show at Le Bourget in June 2013.

"We do intend to compete in the Avro tender, and for this purpose we examined all possible terms and conditions of the future competition. We are currently working on the draft proposals jointly with our Indian partners, including private-sector companies," Kiva said.

Meanwhile, Kiva refused to disclose the actual Indian partners referring to commercial secret, beyond saying that "we are working in a fair and transparent manner and have every reason to believe in our success". He also added that recent cooperation had proved that Ukrainian aircrafts are very much suited for India and Ukraine had worked together with Indian airlines and other users of large fleets of 'An' type aircrafts for a long time. The overall record of successful upgrades of An-32 has reached 100 aircrafts.

The Indian MoD is looking at the Antonov An-148 along with other airplanes including the Ilyushin Il-114, the EADS Casa C-295 and Alenia Aeromacchi's C-27J Spartan.

The first aircraft is expected for delivery within four to five years after the contract is signed. The deal could be worth in the region of USD 2.5 to 3.0 billion.

CONSTRUCTION OF UKRAINE'S TELECOMMUNICATION SATELLITE SYSTEM PROCEEDING ON SCHEDULE - SSAU

Ukraine's national telecommunications satellite system, which is being created under an international cooperative project involving Ukraine, the Russian Federation and Canada, is 70% ready, a source from Ukraine's State Space Agency (SSAU) told Interfax on 12th August 2013.

The progress of the project was discussed during a meeting in Kyiv, which brought together the general contractor – Canada's MacDonald, Dettwiler and Associates Ltd. (MDA); the manufacturer of the satellite's platform – Academician Reshetnev Information Satellite Systems (Russia); the Center for the Operation of Space Ground-Based Infrastructure (Russia), who is responsible for the launch of the satellite; the Customer – the State Space Agency of Ukraine; the operator of the first national Lybid telecommunications satellite, Ukrkosmos; the designer and manufacturer of the Zenit Launch Vehicle – Pivdenne Design Bureau and Pivdenmash (both based in Dnipropetrovsk); and the National Space Facilities Control and Test Center (Yevpatoria).

"The meeting addressed the progress on manufacturing the national communications satellite system as a whole, and the satellite and the ground-based infrastructure for its control and provision of launch services. As of August 7, the project was 65% ready," the State Space Agency reported.

"Tests of the European-Ukrainian and Indian antennas have been completed. In addition, the project on launch services has already been officially approved, and the readiness of the Zenit-2SB80 for launch has been inspected".

"The preparation of the ground infrastructure that will accommodate a ground-based satellite control complex (Yevpatoria, Crimea), is underway. Negotiations have started with the Telespazio international satellite operator concerning the use of an alternative satellite control station," the agency said.

The launch of the first Ukrainian communications satellite is scheduled for the end of December this year from the Baikonur cosmodrome using a Zenit 2 SLBF carrier rocket. The National Space Facilities Control and Test Center (Yevpatoria) will control the satellite.

RUSSIA, UKRAINE, KAZAKHSTAN TO BUILD SPACE LAUNCH FACILITY 'BAITEREK'

The heads of national space authorities from Russia, Kazakhstan and Ukraine, at a session of CIS space cooperation agencies, confirmed their intentions concerning the Baiterek space launch complex.

Baiterek, which was originally planned to launch Russian Angara rockets, will be reconfigured for Ukrainian Zenit carrier rockets.

This follows from a press statement released by Kazakhstan's national space agency, Kazcosmos, on July 10, 2013.

The heads of Kazakhstan's, Russia's and Ukraine's national space agencies, Talgat Musabaev, Vladimir Popovkin and Yuri Alekseev signed a joint protocol on cooperation in the Baiterek project configured for space launches with Zenit rockets.

The document confirms that the national space agency chiefs of Russia, Ukraine and Kazakhstan have an interest in developing cooperation under the trinational Baiterek project.

NEXT BATCH OF BTR-3E1 APCS SHIPPED TO THAILAND

Officials of Ukrspecexport State Company and the Royal Thai Army have signed an acceptance certificate for another 21 BTR-3E1 armored personnel carriers manufactured by Ukraine under a government-to-government agreement with Thailand, a press officer for Ukrspecexport told Interfax citing Serhiy Hromov, the CEO of Ukroboronprom, as saying on 30th July, 2013.

The 21 vehicles include 15 BTR-3E1s in the baseline configuration plus six BTR-3RKs armed with anti-tank missiles.

The BTR-3RK is the youngest sibling in the BTR-3E1 family of APCs, Hromov said: "This vehicle has been designed to defeat units of tanks and armored fighting vehicles. Compared to two missiles seen on the baseline version, the BTR-3RK carries four ready-to-fire missiles, in addition to 12 missiles stowed in the hull of the vehicle".

"The manufacture of the six missile-armed vehicles marks completion of the first major contract with Thailand, while the 15 baseline BTR-3E1 APCs have been built under a follow-up contract," the top official of the Ukrainian contractor said.

In the middle of September, the 21 vehicles are due to arrive in Thailand where they will undergo ride tests and live firing trials before being finally accepted by the Customer.

POLAND'S MISTA STARTS LICENSED PRODUCTION OF UKRAINIAN APC DOZOR-B

Polish company Mista has begun licensed production of the Ukrainian Dozor-B 4x4 armored military vehicle in the armored personnel carrier configuration and is in the final stages of securing an export customer, Jane's Defense Weekly reported on 19th August 2013.

The Polish version of Dozor-B will be named Ocilla and is an upgrade to meet western manufacturing and quality standards as well as NATO ballistic protection requirements. A first demonstration vehicle was completed at the end of July using Ukrainian-manufactured parts and components. Mista and the licence rights owner are understood to be in the final stages of negotiating a contract with an undisclosed country for delivery of an initial batch of vehicles, with an option for several dozen more. The contract is expected to be signed by year's end. Mista intends to manufacture the initial five pre-production examples of the Ocilla vehicle during 2013, whilst gradually upgrading the baseline configuration by adding armored plates and Polish-made NATO-standard equipment as well as driving axles and wheels.

At the next stage of the development, the vehicle will be fitted out with a remotely controlled weapons station replacing a single-man turret. The prototype will undergo a comprehensive testing program at the Military Institute of Armored and Automotive Technology in Sulejówek, Poland.

MALYSHEV FACTORY RETURNS TO PROFIT

The Malyshev Factory, for the first time in many years, finished the first six months with a net profit of USD 62,500, UNN reported citing Malyshev's CEO, Vadym Fedosov's report to Ukroboronprom State Concern.

"The restructuring program being fulfilled at Malyashev Factory with support from Ukroboronprom State Concern has enabled it to reduce costs whilst creating the necessary preconditions for economic growth," Fedosov said.

In the first half-year 2013, the Factory, for the first time in the past several years, ended a period of unprofitable operations and finished the six months with a net profit, he said.

"The Company earned a net profit of UAH 62,500 over January-June 2013, after a USD 13.6mn loss a year earlier. Simultaneously, tax contributions to budgets of all levels grew from USD 1.8mn to USD 2.1mn over the period under review.

These achievements are the results of joint efforts with Ukroboronprom State Concern aimed at ensuring economic recovery of the domestic armored military vehicle industry and its flagship company – the Malyshev Factory," Vadym Fedosov said.

Corporate Partner

JAS-ANZ

ISO 9001:2008 Certified

SOARING HIGH, INC.

Trusted Source of OEM Parts

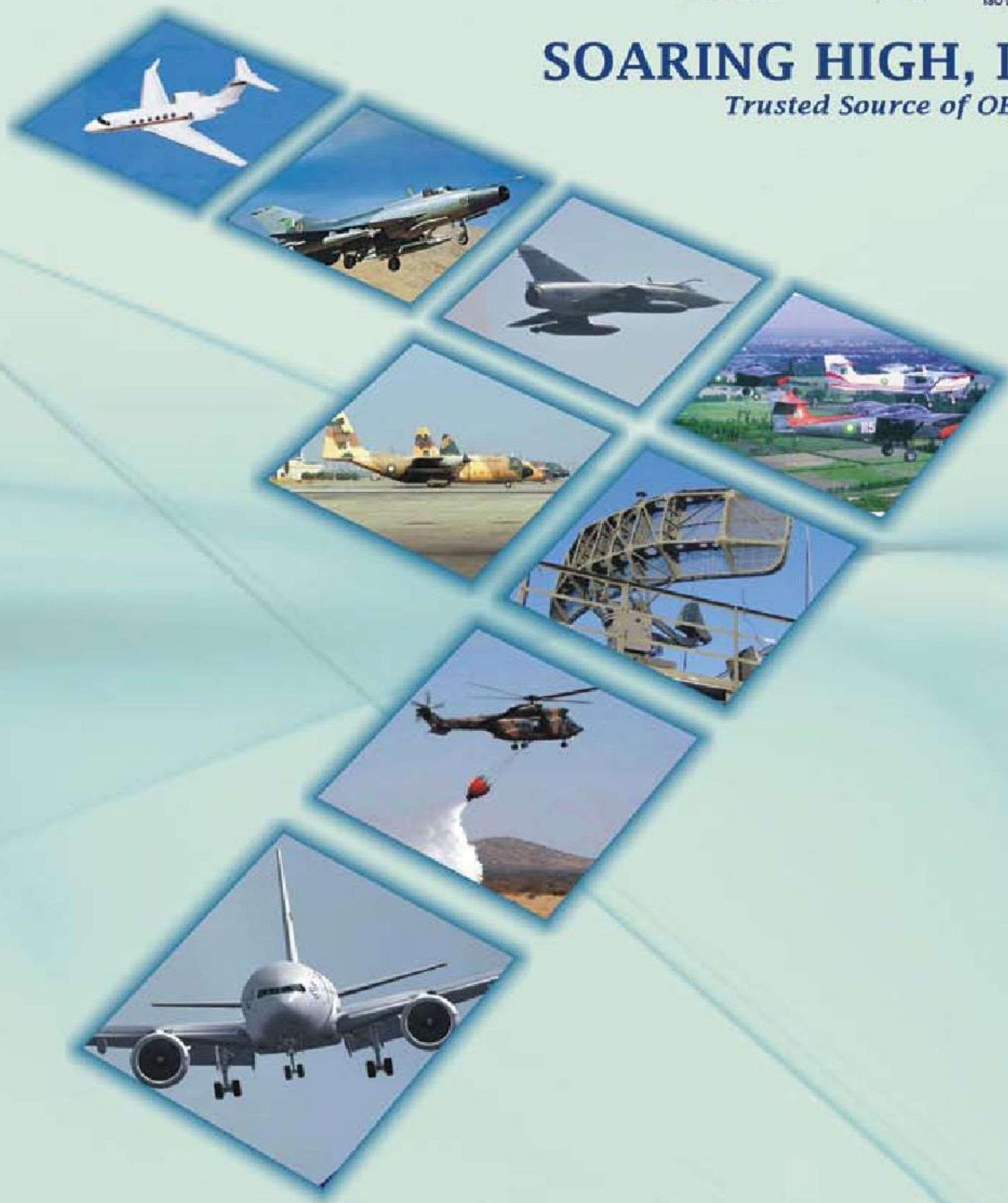

SOARING HIGH, INC.

Office # 03, Zafar Plaza, Khurshid Market, F-10/1, Islamabad - 44000, Pakistan

Tel: +92-51-2113124, Fax: +92-51-2113125, E-mail: info@soaringhighinc.com, www.soaringhighinc.com

BRAZIL WANTS UKRAINIAN ASSISTANCE IN DEVELOPING A NAVAL SHIP

Brazil has proposed that Ukraine assist it in developing a naval ship, the press-service of Ukroboronprom State Concern reported citing the results of a visit to Ukraine by a Brazilian Navy team led by Rear Admiral Petronio Augusto, the coordinator of the Brazilian Navy's modernization program.

Previously, the Brazilian Navy showed interest in establishing cooperation with the shipbuilding companies that are part of Ukroboronprom. The Brazilian team made a trip to "R&D Center for Shipbuilding" State Company and "61 Communards Shipyard" to get firsthand look at the R&D and manufacturing capabilities of the two enterprises. Senior executives from Kherson State Plant Pallada and R&D and Production Complex Zorya-Mashproekt participated in the event.

The Brazilian delegation got familiar with Ukraine's indigenous corvette program, as that country intends to develop a corvette warship for its own Navy.

During the talks, the Brazilian side invited the R&D Center for Shipbuilding to assist in the development of the future corvette, and proposed to sign a government-to-government deal on cooperation in the corvette program.

SMART-HOLDING GROUP SHOWING INTEREST IN MILITARY COOPERATION WITH SINGAPORE

Ukraine's Smart-Holding Group may "become particularly interested" in forging military-technical cooperation with Singapore, khersonline.net reported on 22nd July 2013, citing analysts from Geostrategy group.

The analysts particularly assumed that the owner of Smart-Holding "is placing a political stake on the Crimean Peninsula". After Vadym Novinsky, President of Smart-Holding Group, won by-election to Verkhovna Rada in Sevastopol, he has a particularly great interest in ensuring full capacity operation of his own companies where his potential electors are employed among others.

Smart-Holding includes shipbuilding companies such as Kherson Shipbuilding Plant and Black Sea Shipbuilding Plant, while Vasyl Fedin, ex-CEO of the former company, is currently in charge of the holding's shipbuilding division.

Pallada Shipyard is another candidate for cooperation with Singapore. The State-run company is part of Ukroboronprom State Concern, as are Feodosia's Morye Shipbuilding Company and the "R&D Center for Shipbuilding" State Company.

Thailand is one more country to show interest in Ukrainian corvette and anti-submarine ship projects, while unique Ukrainian "Project 958" amphibious craft is of particular interest to Singapore, experts claim.

SCIENTIFIC PRODUCTION CORPORATION

FED CORPORATION

85 YEARS OF EXPERIENCE

OEM AND DEVELOPMENT

Aggregates for airplanes

Aggregates of engine control system

Aggregates for helicopters

- Energy-savings and new technologies of energy production
- New materials and nano - technologies

- Aggregates for military transport
- Aggregates for railway transport

132, Sumskaya str., Kharkov, 61023, Ukraine
tel.: + 38 057 700 50 41, 700 42 70, fax: + 38 057 715 64 76
www.fed.com.ua

THE FIRST TO GO

MALYSHEV FACTORY – UKRAINE'S LEAD PRODUCER OF ARMORED MILITARY VEHICLES – DEMONSTRATED ITS PRODUCTION LINE AND AN INITIAL NUMBER OF NEWEST BATTLE TANKS OPLOT TO EXPORT CUSTOMER ON JUNE 26, 2013

It is known that on 1st September 2011, Ukrspecexport signed a contract for the supply of a number of heavy armored military vehicles to the Armed Forces of the Kingdom of Thailand. Under the terms of the contract, Ukraine will manufacture and deliver 49 main battle tanks Oplot worth over USD 240 million. The tanks will be built by Malyshev Factory in Kharkiv. The Oplot will be the biggest tank deal ever since the time of the crucial Pakistani contract.

The first production-standard Oplot tank – painted in military camouflage style and featuring production number "01" on its turret side – rolled out of the plant's floor on June 26, 2013. In significance terms, this ceremonial roll-out of the vehicle was akin to that of the T-34 -- one of the best tanks ever, which was also conceived and produced in Kharkiv.

Ensuring series production of the Oplots and implementing a major export contract for the supply of new vehicles to Thailand is a crucial milestone for Malyshev Factory and its newly-appointed managers, with which they have to deal in nearly warlike conditions ...

At the end of spectacular demonstration of the tank, CEO of «Ukroboronprom» State Concern, Serhiy Hromov said that «Ukroboronprom» has demonstrated the first unit of production-standard Oplot to the Customer, which is a next-generation tank that encompasses new technologies and innovations of international excellence.»

Vadim Fedosov, director general of Ukroboronprom's Malyshev Factory, noted that «Thailand will obtain not just modern tanks, but vehicles that contain a huge potential for modernization.» Armored Troops Commander, Major General Bunsantin Sansavat, who led the Royal Thai Ar-

my's visiting team, said: «I am grateful to the Ukrainian side for its commitment to the common cause, for its willingness to ensure that the tanks are supplied within the stipulated timeframe. This battle tank conforms to international standards in the military field, and it is going to add to the Thai Army's fighting capacity."

It was announced during the Kharkiv visit by the Thai delegation that all of the 49 contracted tanks would be delivered to the Customer by the end of 2014 as scheduled under the contract. In this context, Maj. Gen. Bunsantin Sansavat said that the Thai side wants more of its military personnel to undergo training in Ukraine for handling the new tanks. Previously it was agreed that Oplot tank training would be provided on a 'train the trainer' basis for 25 personnel of the Royal Thai Army.

«To us, this is a radically different weapons system. For example, all the tanks we operated before had had a crew of four. Now that we are switching to a three-man crew configuration, certain alternations in the Armored Troops' personnel structures will have to be made," said the general. He furthermore pointed out that the Thai side considered purchasing a number of tank simulators in addition to those already included in the Oplot contract in order to be able to provide training to tank crews as possible both in Ukraine and Thailand. The Ukrainian side promised to examine this possibility as soon as possible.

Photos courtesy of
Yuri Shchekov, Dmytro Neimyrok, Volodymyr Kopchak, Serhiy Zghurets

INITIAL CONSIGNMENT OF OPLOT TANKS WILL BE SHIPPED TO THAILAND BY YEAR'S END

ABOUT THE OPLOT IN DETAIL

The T-84 Oplot main battle tank, which entered service in the Ukrainian Armed Forces in 2009, is the most recent development by Ukraine's school of thought on battle tanks. Designed and developed by the Kharkiv Morozov Machine Design Bureau, the Oplot is a heavily upgraded version of the T-80UD MBT, offering significant enhancements that improved the vehicle's hitting power (accomplished by way of upgrading armaments and fire control capabilities), battlefield/strategic mobility performance (power pack compartment) and protection level (reduced vulnerability to current-generation armor piercing threats). In fact, the Oplot tank is a different design that is distinctive from the T-80UD by protection system, turret and hull configurations, fire and driving controls, situational awareness capabilities, engine ad gear box etc.

The new fire control system enables both the commander and the gunner of the Oplot MBT to better identify targets -- and at longer distances -- both in nighttime and daylight conditions. The commander has been given a new panoramic observation and sighting capability, while the gunner obtained a new tank sight. The sighting equipment incorporates French-exported Thales Catherine thermal imager. New thermal imaging sights (Buran-Catherine at the gunner's station and panoramic observation and sighting suite at the commander's station) enable targets to be detected out to 6,000 meters during nighttime hours and in adverse weathers. The Panoramic sighting system is designed to provide enhanced situational awareness capability to the commander and makes it possible for the latter to override the gunner and lay and fire the main cannon using his duplicate controls. Types of ammunition that can be fired by the main cannon include APFSDS (armour-piercing fin-stabilised discarding sabot), HEAT (high explosive anti-tank) and HE-FRAG (high explosive fragmentation) rounds as well as 125mm Kombat-type laser beam-riding guided missiles. The total allowance of ammunition of the T-84 Oplot tank includes 46 gun rounds (of which 28 are positioned in the carousel-type loader), 1,250 rounds of ammunition for the coaxial KT-7.62 machine gun, 450 rounds for the KT-12.7 anti-aircraft machine gun, 450 rounds for the AKS submachine gun, 12 rounds for the pyrotech-

nic pistol, ten F-1 hand grenades and 12 aerosol grenades.

The tank's protection system underwent a massive upgrade. The overall survivability of the T-84 was further enhanced by adding an optronic countermeasures system consisting of three key subsystems: the laser threat warner (to give warning of impending attack by laser-guided weapons), the infrared jammers and the smoke/aerosol screen laying system. For improved battlefield survivability, an indigenously-designed latest-generation integral explosive reactive armor package – known as tandem *Duplet* ERA system -- was provided for the turret and the hull sides. The combination of passive armor and integral explosive reactive armor makes the Oplot tank considerably less vulnerable to the full range of state-of-the-art anti-tank weapons with tandem warheads, designers say. The power pack compartment in the T-84 Oplot tank features thermal signature reduction technology in the form of heat insulation devices mounted on its top deck, this resulting in thermal signature of the tank reduced by 20 percent.

For enhanced tactical mobility, the Oplot tank is equipped with a brand new diesel engine, the 6TD-2, developed by the Engine Design Bureau of Kharkiv. Developing 1,200 hp, the engine is designed to give good performance in all weather conditions, especially at high ambient temperatures. Although a diesel engine, the 6TD-2 diesel will also run on other fuels including petrol, kerosene, jet engine fuel or their mixture in any proportion. The capacity of the internal fuel tanks is 700 liters, with an additional 440 liters being stowed in the fuel tanks positioned above the tracks. This gives the T-84 a fuel distance of 450 kilometers.

The new fire control system enables both the commander and the gunner of the Oplot MBT to better identify targets – and at longer distances – both in nighttime and daylight conditions.

The Oplot features an automated gear shifting in place of a mechanical gear selector, which, combined with new driver's steering controls (the driver now steers the vehicle with a steering T-bar rather than tillers), allowed the load on the driver to be reduced 2-2.5-fold during lengthy rides and driving speed to be increased by 5 percent.

As claimed by the designers, the Oplot tank encompasses the technical and design solutions, which make it a state-of-the-art fighting vehicle that outperforms some of its counterparts such as the Abrams, Leopard or the T-90 in the level of protection, the amount of firepower and maneuverability performance. UDR

OPLOT
MAIN BATTLE TANK

The newest T-84 Oplot main battle tank officially entered service in the Ukrainian Armed Forces on May 28, 2009. Designed and developed by the Kharkiv Morozov Machine Design Bureau, the tank is manufactured by the Malyshev Factory in Kharkiv.

The Oplot main battle tank is a tracked fighting vehicle that provides an impressive amount of firepower, reliable protection and excellent maneuverability performance. It is designed to engage all types of ground, surface and slow low-flying targets, under conditions of hostile fire.

Itself an advanced derivative of the T-80UD MBT, the Oplot offers enhancements that improve significantly the vehicle's hitting power, battlefield/strategic mobility performance and the level of protection. In 2009, Ukrainian Armed Forces' General Staff requested that the country's Ministry of Defense procure by 2015 up to fifty Oplot tanks to be assigned to the 17th Detached Tank Brigade, Dnipropetrovsk Region. In the Ukrainian Armed Forces, a tank brigade is composed of three tank battalions, each having a standard organization of 31 tanks. Each tank company has a standard organization of ten tanks.

$4,89 mln

is available price of the Oplot MBT for export customers

FIRE CONTROL SYSTEM (FCS)

$500 000

the price of the new Oplot FCS

The commander's workstation includes new PNK-6 multichannel panoramic tank sight that has daylight and thermal imaging channels and incorporates a laser ranger-finder to enhance the commander's situational awareness, especially in night and reduced visibility conditions. The tank-size target detection range is at least 5,500 meters for the daylight channel and 4,000 meters for the wide field-of-view thermal imaging channel. Aside from supporting capabilities such as detection/identification of ground/air targets and assigning targets to the gunner, the 400-kg PNK-6 sighting system enables the commander to override the gunner and aim and fire the main and coaxial armaments using his duplicate controls

Integrated PNK-6 360° panoramic sighting system

Remotely controlled anti-aircraft machine gun mount with a 12.7-mm antiaircraft machine gun. The anti-aircraft machine gun of remote control type is mounted on the rear turret. It is intended for ground-to-air and ground-to-ground roles and allows firing to be carried out while remaining in the vehicle under full armor protection from the commander's station.

The 125-mm KBA-3 tank cannon is fed by a carousel-type automatic loader that delivers six to eight rounds a minute. The unit cost of KBA-3 cannon is some USD 100,000.

The laser threat warning system for detecting laser radiation transmitted by a threat source

Wind sensor

Two Ukrainian product types – i.e. main battle tanks and ZAZ-family of light motor vehicles % – are similar in that they both are 98 percent domestically produced.

The price of one Oplot MBT would be enough to buy

580

ZAZ «Slavuta» cars

1160 liters

capacity of fuel tanks

370 liters

per 100 km

fuel consumption on dry natural soil road


CREW
2840
7075
with a cannon 9720
4270
combat weight
51 t
ground pressure
0,99 kg/cm²
The Oplot tank incorporates a boresight apparatus that allows a 5-7 pct reduction in circular error probable when firing APFSDS (armour-piercing fin-stabilised discarding sabot), HEAT (high explosive anti-tank) and HE-FRAG (high explosive fragmentation) rounds.
The infrared jammers introduce a spurious signal into the guidance circuitry of the incoming missile through continuously generated coded pulsed infrared jamming signals. This makes it possible to decoy away incoming anti-tank guided weapons.
Modules of indigenously-designed next-generation integral 'Duplet' explosive reactive armor system are mounted on the hull front, turret and hull sides of the Oplot MBT. The Duplet provides robust protection against both explosively formed and subcaliber armor piercing penetrator projectiles. It is able to defeat an attack by a subcaliber armor piercing round fired from a hostile 120-mm tank cannon just 200 meters away.
OPLOT MBT KEY FEATURES
Fording depth in a case of preparation 5 m
Fording depth without preparation 1,8 m
Speed, max 70 km/h
Cross-country speed 45 km/h
Side tilt 25°
Angle of elevation 32°
Height of obstacles 1 m
Width of obstacle 2,85 m
Mileage without refueling 450 km
Explosive reactive armor protection system seen on the Oplot tank is of unique, double-layer design. It is fully efficacious against tandem-warhead shaped charge threats, and still remains almost the only one to be capable of countering attacks by the latest Russian weapon. This is about an anti-tank grenade launcher that is designed to defeat explosive reactive armor with multiple hits into the same place, firing two or more shaped charges in rapid succession. The grenade includes the main round in the main tube and a smaller diameter precursor round in a smaller side barrel tube.
The precursor round acts as a false target, tricking the target tank's protection system into engaging it, allowing the main round a clear path into the core armor. American tank Abrams and Israel's Merkava – which both have single-layer ERA protection – are defenseless against 'tandem' attacks of this type.

THE OPLOT TANK IS ONE OF THE MOST SOPHISTICATED AND ATTRACTIVE FIGHTING VEHICLE TYPES GLOBALLY

VADYM FEDOSOV

GENERAL DIRECTOR SE «MALYSHEV PLANT»

The June 26 rollout of the first production-standard tank Oplot for Thailand was an event of crucial significance for SE «Malyshev Plant». Upon a conversation with managers of the Company, it becomes evident that the Thai deal is nothing more than just one development, albeit a vital one, in a full series of strategic, structural changes that the Company is going through now.

Defense Express (DE): The rollout of the first Oplot tank for Thailand, there is no doubt about that, has already made a splash. Perhaps no surprise, there were many skeptics who, until the last moment, flatly refused to believe that the vehicle would be there on scheduled time. Now there are doubts that all the 49 contracted tanks will be delivered to the Thai customer by the end of next year as stipulated under the terms of the contract. Will you make it?

– **Vadym Fedosov (VF):** You are right; few people believed that today we would be able to demonstrate the first production Oplot tank to the Thai

customer. There were those who openly expected and continue to expect our failure. However, as things stand now, we have made it, and five tanks for Thailand are currently in the final stages of completion. As concerns a certain delay with the delivery of the initial number of tanks, some comments have to be made here.

State Enterprise Malyshev Plant, at the end of 2011, signed a commission contract to supply the above equipment. Production cycle for the Oplot tank takes 11 months, plus an additional up to 7 months needed for commissioning the delivery of most important components such as armored parts. In this case, one must have in mind that at the time of signing this contract our plant had two more ongoing deals to deliver components and assemblies for a tank similar to the Oplot to an export customer.

In addition, the Malyshev Plant State Enterprise has carried out and continues to carry out contracts to supply Oplot tanks and less sophisticated Bulat tanks to Ukraine's Defense Ministry. Where is a delay here? Indeed, everyone — the Customer, Ukrspecexport and we ourselves — want the delivery to take place as sooner as possible. But there are some objective conditions and there are calculations. The Oplot tank, if compared to the T-80UD tank that our Plant exported to Pakistan previously, is more complicated to manufacture by a factor of 1.8. The Oplot tank is one of the most sophisticated and most attractive fighting vehicle types globally, so it just cannot be manufactured within a short time.

DE: In an interview with Ukrainian TV channels, Serhiy Hromov, CEO of «Ukroboronprom» State Concern, said that the Oplot tank that will be exported to Thailand will have no equal in the world in terms of some of its performance parameters. What are these parameters?

– **VF:** The Oplot has its outstanding advantages, indeed. At 51 tons, the Oplot tank has an armor protection that, at the minimum, is commensurate with that of the Leopard 2A7 and M1 Abrams SEP

tanks that weigh in the region of 68-70 tonnes. This means that Oplot is the best in the world in terms of specific weight of armor protection per overall mass unit. The Oplot tank is able to cross water obstacles to a water depth of 1.9 m without preparation, of which none of the existing MBT types, except for Malyshev tanks, is capable. Preparation time for crossing river-line obstacles of up to 5 meters deep does not exceed 20 minutes, which, again, is a record.

The Oplot can stay submerged during an average ten hours or longer till run out of fuel. The tanks with fan cooling of the power pack and engine compartment (with the engine compartment forcefully pressurized) can stay submerged till the engine is overheated, which is no longer than 15-20 minutes.

The Oplot tank has 28 ready-to-fire rounds in its carousel-type ammunition feed system, which is the biggest loadout of ready rounds of ammunition currently available for tanks with a mechanized loading system. It has the most compact power pack compartment among all the tanks with engines developing more than 1000 hp, this resulting in a lower silhouette, hence observability, and a considerable mass saving.

DE: In addition to main battle tanks, Malyshev Plant has tank engines in its product portfolio. What production goals with respect to tank engines are you planning to achieve?

VF: Fifty engines in two configurations – the 6TD and 3TD – per month (including for the Oplot tank), plus 25 to 30 sets of transmissions gear boxes every month. The central element of all the contracts that Malyshev Plant has now and will most probably have in the future includes engines and transmission gear boxes, which are both parts of power packs and tanks as a whole. Malyshev Plant is the only one to deal with items in this product range. We are planning to launch a new production process for engines and transmission boxes by the end of this year.

DE: Is your plant prepared for dealing with the tasks related to the ongoing export contracts? What if the contracts will grow in numbers?

VF: Malyshev Plant is a huge enterprise by current standards. Land holdings alone make more than 300 hectares. This gigantism resulted from an unaccountable policy that dates back to the USSR. The enterprise is extremely expensive.

There are several reasons for this situation. The first and main reason, in my opinion, is an excessive number of employees, this combined with major imbalances and disproportions in the structure of workforce. For example, one of our Western competitors, occupying an area of only 2.7 hectares and employing less than 700 people, yearly manufactures 375 million worth of products that are similar to our products!

Thus, a radical reorganization seems unavoidable to us. By September 2013, we are planning to reduce our employee staff to 2700, including 1,500 blue-collar workers and 500 supporting staff, plus managers, narrow professionals, non-manufacturing team, operative personnel etc.

We are witnessing a paradoxical situation where our current portfolio of orders is eight times what we are capable of. Whereas the whole world is chasing orders, we have to delay or put on hold the orders that we are expected to be able to fulfill not tomorrow but today. So there is need for urgent restructuring and switching to current production methods that will enable us to manufacture the products types that are both already well-known on the market or are about to emerge on the pages of our promotional booklets soon.

Today is the most opportune time for us to work for the future and the progress. Among the favorable factors are the continuing growth of the global arms market segment where we are present; a potential that we have to complete the technological component of the manufacturing process using currently available advanced technology solutions; and – despite the existing skepticism – the growing authority worldwide of our brand name, the Malyshev Plant.

DE: When being the CEO of Kharkiv's Tank Repair Plant for many years, you actively promoted various developments and front-wheel drive platform designs based on the T-64 tank. Does this trend continue to exist in the present realities?

VF: It does exist, and how! I have believed and continue to believe that, for Ukraine, the T-64 tank is the most promising project both in terms of its [tank] industry growth and the advancement on the export market, and there are a few favorable factors. A little bit later, I hope we will have a reason to talk about the new designs derived from the T-64, which we are slowly materializing into actual items in metal.

T-64 was the precursor of all the innovations in the tank building domain which have been and continue to be created in Ukraine, Russia, China, Pakistan and Poland. It was the T-64 design that gave birth to spin-offs such as the T-72, T-90, T-80, Oplot, MBT-2000 and Al-Khalid, which are all effective tanks in their own right.

DE: You've mentioned the tank types that were created based on the Soviet school of tank's concept. But what about the vehicles of Western designs? Are they worse than the T-64 in terms of performance capabilities?

VF: Tank types by Western or Eastern designers, whether autoloaded or manually loaded, have no future ahead of them. Those designs don't have room for improvement, except for fire control system or, to some extent, maneuverability performance. For vehicles weighing 65 or 70 tons, which already have limited moving ability – this improvement will not be of much significance. It seems to me that their favorite unitary shell will be an obstacle that will prevent their jump into the future ... while the classic T-64 has retained its unique, unequalled potential for modernization. So our goal is to develop, within the shortest time frame possible, a new image for this tank, relying on all the capabilities of «Malyshev Plant» State Enterprise and using the latest global developments in electronics and thermal imaging technology domains.

DE: What exactly do you mean?

VF: I would not jump the gun. Time will tell... UDR

UPCOMING DEFENCE IQ EVENTS INCLUDE:

Defence iQ
a division of IQPC

MARCH 2013

DIRECTED ENERGY SYSTEMS
5 – 7 March 2013, London, UK
www.directedenergysystemsevent.com

MILITARY FLIGHT TRAINING
11 – 13 March 2013, London, UK
www.militaryflighttraining.com

CARIBBEAN BASIN COASTAL SURVEILLANCE AND MARITIME SECURITY
12 – 14 March 2013,
Santa Barbara Beach And Golf Resort, Curaçao
www.cabsecevent.com

AIR POWER MIDDLE EAST
18 – 19 March 2013, Abu Dhabi, UAE
www.meairpower.com

AFLOAT SUPPORT AND NAVAL LOGISTICS
18 – 20 March 2013, London, UK
www.afloatsupportconf.com

INTEGRATED AIR MISSILE DEFENCE
19 – 21 March 2013, Warsaw, Poland
www.airmissiledefenceevent.com

FUTURE ARTILLERY
20 – 22 March 2013, London, UK
www.future-artillery.com

ANTI-SUBMARINE WARFARE
19 – 21 March 2013, London, UK
www.antisubmarinewarfare.com

APRIL 2013

DEFENCE LOGISTICS UAE
22 – 24 April 2013, Abu Dhabi, UAE
www.defencelogisticsuae.com

MINE COUNTERMEASURES
23 – 25 April 2013, London, UK
www.minecountermeasures.com

C3IS IN THE DEPLOYED ENVIRONMENT
28 – 29 April 2013, London, UK
www.c3isevent.com

MAY 2013

ARMOURED VEHICLES UAE
20 – 22 May 2013, Abu Dhabi, UAE
www.armouredvehiclesuae.com

JOINT PERSONNEL RECOVERY
21 – 22 May 2013, London, UK
www.jointpersonnelrecovery.com

COASTAL SURVEILLANCE BRAZIL
21 – 23 May 2013, Brazil
www.coastalsurveillancebrazil.com

ARCTIC PATROL AND RECONNAISSANCE
21 – 23 May 2013, Copenhagen, Denmark
www.arcticpatrolandrecon.com

AIR WEAPONS INTEGRATION
21 – 23 May 2013, London, UK
www.airweaponsevent.com

FIGHTER NORDIC
29 – 30 May 2013, Copenhagen, Denmark
www.fighternordic.com

JUNE 2013

ARMOURED VEHICLES BRAZIL
26 – 28 June 2013, Sao Paolo, Brazil
www.armouredvehiclesbrazil.com

FUTURE ARTILLERY INDIA
June 2013, New Delhi, India
www.futureartilleryindia.com

OFFSHORE PATROL VESSELS LATIN AMERICA
June 2013, Brazil
www.opvlatinamerica.com

INFORMATION OPERATIONS
June 2013, London, UK
www.informationoperationsevent.com

JC4ISR
June 2013, London, UK
www.jointc4isr.com

DEFENCE IT
June 2013, Brussels, Belgium
www.defence-it.com

COUNTER-IEDS
June 2013, London, UK
www.counteriedevent.com

JULY 2013

INTEGRATED AIR MISSILE DEFENCE BRAZIL
July 2013, Brazil

ARMOURED VEHICLES AFRICA
July 2013, Ghana
www.armouredvehiclesafrica.com

AUGUST 2013

ARMOURED VEHICLES SOUTH AFRICA
August 2013, South Africa
www.armouredvehiclesevent.co.za

SEPTEMBER 2013

MILITARY AIRLIFT
September 2013, London, UK
www.militaryairliftevent.com

ARMOURED VEHICLES TURKEY
September 2013, Turkey
www.armouredvehiclesturkey.com

CLOSE AIR SUPPORT
September 2013, London, UK
www.closeairsupport.co.uk

INFANTRY WEAPONS
September 2013, London, UK
www.infantryweaponsconf.com

SOLDIER MODERNISATION INDIA
September 2013, India
www.soldiermodindia.com

MILITARY ENGINEERING
September 2013, London, UK
www.militaryengineeringevent.com

OFFSHORE PATROL VESSELS
September 2013, The Netherlands
www.offshorepatrolvessels.com

MARITIME RECONNAISSANCE AND SURVEILLANCE
September 2013, Italy
www.maritimerecon.com

OCTOBER 2013

AMPHIBIOUS OPERATIONS
October 2013, London, UK
www.amphibiousoperations.com

FUTURE MORTAR SYSTEMS
October 2013, London, UK
www.future-mortars.co.uk

INTEROPERABLE OPEN ARCHITECTURE
October 2013, London, UK
www.ioaevent.com

CYBER DEFENCE FORUM
October 2013, Prague
www.cyberdefenceforum.com

ARMOURED VEHICLES ASIA
October 2013, Singapore
www.armouredvehiclesasia.com

NOVEMBER 2013

MEDICAL AND CASUALTY EVACUATION
November 2013, London, UK
www.medevacevent.com

INTERNATIONAL FIGHTER
November 2013, London, UK
www.international-fighter.com

ARMOURED VEHICLES INDIA
November 2013, New Delhi, India
www.armouredvehiclesindia.com

MARITIME LIFE CYCLE MANAGEMENT, REPAIR AND MAINTENANCE
November 2013, London, UK
www.maritimelifecycle.com

DECEMBER 2013

ARMOURED VEHICLES NORDIC
December 2013, Oslo, Norway
www.armouredvehiclesnordic.com

The event calendar may be subject to change

INTERESTED IN SPONSORING?

Contact our Business Development Specialists:
+44 (0) 207 368 9735 sponsor@iqpc.co.uk www.defenceiq.com/join.cfm

WANT TO ATTEND AN EVENT?

Get a 10% Discount by Referencing
DFIQ_EVENT +44 (0)20 7368 9737 enquire@defenceiq.com

SIGN UP FOR YOUR FREE MEMBERSHIP TO DEFENCE IQ! Visit www.defenceiq.com/join.cfm

Join our online communities for free:

Follow **@DefenceIQ** to keep up to date with news and developments on air defence, cyber warfare, armoured vehicles, naval defence and land defence

Join Defence IQ World Defence Community on LinkedIn

Read the Defence IQ blog authoritative news source for high quality and exclusive commentary and analysis on global defence and military-related topics **defencesummits.wordpress.com**

www.defenceiq.com

OLEKSANDR VERETENNIKOV

CHIEF DESIGNER/
CEO, A.A. MOROZOV
MACHINE DESIGN
BUREAU OF KHARKIV

OPLOT IS AN OPTIMAL COMBINATION OF FIREPOWER, ARMOR PROTECTION AND MANEUVERABILITY

DE: It is claimed that the new tank Oplot is now better adapted to capabilities of its human operator. Simultaneously, control of the tank's systems responsible for maneuverability performance has improved substantially. How have you managed this?

Oleksandr Veretennikov (OV): For now, the tank's maneuverability performance is not limited by its technical capabilities but, rather, by the functional and physiological abilities of the man operator. To be able to drive fast, one has to see well and to respond quickly to environment changes. It should be noted that the basic data on the tank's mobility, which can be seen in promotional materials or other publicly available technical information – particularly, cruising range or driving speed – will, in practice, depend in a great degree on the driver's skills. In order to ensure the required level of driving skills, you need to burn out tons of diesel fuel during practice driving sessions or drive on a train-

ing simulator and subsequently reinforce your skills in actual driving conditions. This is all important, indeed, but we have gone farther still. Specifically in the Oplot tank, we have implemented an automatic driving system, which, roughly speaking, allows a medium-skilled driver to drive the vehicle as well as a high-skilled driver would do, with resulting savings in fuel and the vehicle's service life.

DE: How does it happen in reality?

OV: When the tank is riding on rough terrain, you all the time need to shift gears to cross all sorts of obstacles. Somewhere you need to brake, and somewhere to accelerate. What a low-skilled driver with little driving experience would do? He would set the gear shift lever in the lower position so that to avoid transmission shifts, and increase the RMP rate. As a result, the engine is operated at higher speeds, with a reduced service life as one dire consequence. The automatic driving system that we implemented in the Oplot tank encompasses algorithms that allow the engine and transmission to be operated optimally, depending on road conditions and the goal pursued by the driver.

In addition, it should be understood that battle tank is a heavy and bulky yet speedy enough vehicle. When driving and cornering at high speeds, it tends to drift, and the driver must be able to respond to the dynamic behavior of the vehicle. A qualitatively different approach is implemented in the Oplot design. The tank has a wheel by which the driver controls its yaw behavior, while the desired curve radius and trajectory will be controlled automatically.

DE: What battlefield advantages does new fire control system provide for the crew of the tank BM 'Oplot'?

OV: The 'Oplot' tank is outfitted with a new fire control system (FCS) that includes new PNK-6 panoramic tank sight, which greatly enhances the tank's ability to detect, identify and defeat battlefield targets – by day, and especially by night. The FCS includes two thermal imagers, a day channel and a night channel, and allows both the tank gunner and commander to have access to the full range of tank weapons.

In Soviet tank designs, the commander and gunner had their roles separated. Previously, the commander, after having detected a target and assigning it to the gunner, could not interfere with the latter's actions should anything go wrong. Much of success therefore depended on the level of crew interaction. At the current development level of the fire control technologies used in the Oplot tank, the weapons control functions are duplicated. The commander can select a target and provide target cueing for the gunner's workstation. Thus he is able to adjust the gunner's actions to some extent or, if necessary, to assume full responsibility for engaging the target. This greatly increases the efficiency of the tank in fire engagement with the enemy. Today we can say with confidence that, with the new fire control system in place, we have reached the European level of excellence in the battle tank design and development area.

DE: Some may argue that the sighting head of the PNK-6 sight is positioned excessively high above the turret. Do military and export customers require the protrusion height of optical devices to be lowered?

OV: No, they don't. The fact is that the 'head' of the central PNK-6 unit is large because it supports firing from both the tank's gun and the anti-aircraft machine gun. The height could be reduced, for example, by way of assigning firing missions from the main gun and the anti-aircraft machine gun to different optical devices. This would reduce two-fold the height of the PNK-6 unit, but at the cost of more complicated weapons control.

DE: In the current situation, what do you think of the «Kombat» ATGW round, which is suitable for launch from the gun barrel on the Oplot tank? Will it add to the tank's competitive advantages in a fire engagement with the enemy, or is it just an excessive luxury?

OV: When engaging a target at a range of up to two kilometers, he who is able to detect and defeat the target first will win. This is a fifty-fifty situation regarding both sides. But at distance of three to five kilometers, Oplot has an obvious advantage over any of its competitors – just because its ammunition allowance includes guided missiles with a long enough range that is two times that of a conventional tank-fired projectile. It is really satisfying that Ukraine has travelled the path to creating indigenous ATGW weapons by building its own school of though and by relying on its own national technological and industrial bases.

DE: What about the armor protection?

OV: Oplot tank is well protected both in the hull front and the sides. It employs a next-generation explosive reactive armor (ERA) system that provides reliable protection against armor piercing attacks from 500 meters, using all currently existing types of ammunition flying from most likely firing angles.

DE: Isn't the part of the turret that holds smoke grenades too vulnerable to potential attacks?

OV: No. The smoke grenades are positioned, shall we say, beyond the plane of the crew compartment. Indeed, in case of a successful attack, the smoke grenades will explode and become disabled, but no risk to the crew will exist.

DE: How did you handle the challenge of providing protection against nucleus-striking-type rounds that attack the tank from the upper hemisphere?

OV: It was handled, again, by outfitting the roof of the turret with new ERA plates that are efficacious against threats attacking from the upper hemisphere. In this case, the tank should not be regarded as something like a war elephant that has to do everything by itself or to carry everything on itself. Creating a super tank capable of protecting simultaneously against all

threats would be a dead-end idea. Let me remind you that the tank is part of a combined arms battle system. And if someone asks stupid questions such as, «What would happen if a tank unit was attacked by helicopter gunships?», I would answer thus, «Yes, the gunships would defeat the tanks, indeed, if the vehicles were not properly secured. « What would happen if a tank drove to an airfield with aircraft or helicopters? The result would be exactly the opposite. No weapons can make up for tactical errors by the commander.

DE: It is believed that the potential for increasing battlefield efficiency of the tank by improving the capabilities of any individual vehicle has been virtually exhausted, and that in the current realities it is necessary to rely on close integration of the tank and C4I assets. The tank should become a full-fledged component of the «digital battlefield». What do you think about that?

OV: Any kind of battle management system, especially an integrated command, control, communications and intelligence system, even one that functions as tactical echelon headquarters, is a highly complex system. Being designers of tanks, we know how it needs to function with regard to the maximum possible use of the tank or a similar means of destruction.

To be effective, a C4I system should cover the entire battlefield expanse. But for a C4I system of tactical or operational and tactical levels to be able to operate as appropriate, full integration of the C4I system (at the level of common interfaces, protocols, channels) and armed services is necessary. Indeed, the Oplot tank integrates current-generation digital communication facilities and Global Positioning System (GPS) receivers that allow for position location of any individual vehicle for both its crew and the commanding officer in charge of a tank battalion, for example. Thus there are all the basic elements necessary for integrating the tank into a common C4I network. What remains to be done is to integrate these into a single configuration and to develop an algorithm to ensure appropriate interaction between those elements. The synergy will be only possible if those working elements of any individual tank are integrated into a truly effective C4I network.

DE: Can it be said that, for the Ukrainian army, Oplot is the last type of tank of traditional design, and further enhancements will be achieved not by improving the tank proper but, rather, by increasing its operational effectiveness?

OV: Any improvement of traditional mechanical systems of the tank is unlikely in the near future. This is shown by the example of the American M1 tank, which during the past two decades has not seen any significant improvements either with regard to mechanics, or armor protection, or with regard to armaments. A qualitative development is ensured only due to improved fire controls and C4I capabilities ... The development of a fundamentally new tank design will be possible with the advent of new technologies in engineering and war fighting. UDR

Interviewed by
Serhiy ZGHURETS,
Volodymyr KOPCHAK
Defense Express

[interview]

SURVIVE ON THE BATTLE

UKRAINIAN DEVELOPMENTS IN

EFIELD

AFV PROTECTION TECHNOLOGY

For the Ukrainian defense industry, developments in explosive reactive armor (ERA) technology and active protection systems (APS) are an important area of focus which is indispensable for ensuring safety of Mounted Infantry in the field. State-owned enterprise «Microtec Base Center for Critical Technologies» is the only Ukrainian company to specialize in the development and manufacture of ERA and APS technologies for armored fighting vehicles (AFV). Ukrainian Defense Review has interviewed Vasyliy Khytryk, Chief Designer and CEO at Microtec, about his Company's latest products and designs.

UDR: Could you tell our readers in a few words what have been major projects by Microtec recently?

V. Khytryk: During its 20 years of existence, our small enterprise has accomplished great successes, both in the commercial and military markets. As regards designs for the military market, elements of the new-generation ERA system Nozh (or «Knife») and Duplet family of APS elements for protecting AFVs against tandem-warhead threats have been designed, developed and approved for the Ukrainian Armed Forces' service, and have been supplied to both the Ukrainian MoD and export customers. Particularly the ERA system Nozh has been integrated into the T-64BM/Bulat main battle tank (MBT) upgrade package, and Duplet has been adopted for the new indigenously developed MBT Oplot. Nozh secures the host tank against all known armor piercing threats, including subcaliber armor-piercing penetrator projectiles, non-tandem-type hollow-charge rounds or striking-nucleus-type impact munitions. The ERA system Duplet reliably shields the host armored platform from tandem-warhead shaped-charge weapons — which have recently received huge development effort — in addition to the range of threats defeated by Nozh. Both Duplet and Nozh designs are so far unique in the world. In addition to this, we have developed active protection system Zaslon which has been qualified for service with the Ukrainian Armed Forces. Zaslon is designed to protect an armored combat platform against antitank weapons of all types, including armor piercing grenades with unitary or tandem shaped charges which are fired from handheld or mounted grenade launchers, as well as from antitank guided missiles, gun fired armor-piercing rounds and shaped-charge artillery projectiles approaching at 70 to 1,200 m/s. It is so far the only APS design in the world capable of intercepting high-velocity armor-piercing threats approaching at 750 m/s or faster.

The Company's product portfolio additionally includes motion platform trainers for MANPAD weapon systems, motion simulators for training drivers of armored fighting vehicles BRDM-2, BTR-70/80, BTR-80UP, BMP, main battle tanks T-72, T-55, T-62 and others.

ERA system Duplet will be installed on the Oplot tanks being delivered under a contract with Thailand, and elements of the Nozh system have been supplied to Ethiopia, under a contract for the upgrading of T-72 tanks. Both Nozh and Duplet are second to none in the world in terms of combat performance capabilities. Zaslon, even though it was approved for service back in 2009, has not been integrated with our tanks so far. Zaslon remains to be relatively expensive, but I estimate that its price may reduce by almost fifty percent if there will be orders and we proceed to full-rate series production [of the item].

UDR: To what extent can the new ERA designs be considered to be «purely Ukrainian»?

V. Khytryk: The 'Nozh' and 'Duplet' reactive armor designs that we developed are both of solely Ukrainian origin. The allegations or contentions by our rivals and enemies to the effect that the designs are not Ukrainian and that something of the kind had already been developed earlier are all groundless. If such designs really were there, where are they now then? All the allegations are 'absurd', as is the contention that seven electric detonators with synchronized ignition capability are allegedly required to set off seven extended 'knife' charges 'Nozh'. Those who make such allegations should better understand the subject matter, which is accomplishable by way of working together rather than by mudslinging yesterday's counterparts.

All of the hardware components, materials, assembly units and reactive armor/active protection products are manufactured here in Ukraine without the need to purchase anything from foreign suppliers. Lean cooperation system between Ukrainian companies has been built up and is now functioning with success, enabling explosive reactive armor systems and active protec-

tion suites to be put out in sufficient quantities required by the Ukrainian Armed Forces.

UDR: There is currently an acute need to develop similar protections not only for main battle tanks but lighter armored fighting vehicles as well. Does your company work in this area?

V. Khytryk: Indeed, there are attempts being made globally to transfer from heavy weight to lighter armored fighting vehicles. This trend may be justified in the light of using this equipment in local war conflicts in regions with developed infrastructure. Everything depends on which tasks are to be addressed, because in actual fact, the missions that previously were assigned to heavy armored fighting vehicles have currently been handed over to lighter weight vehicles. However, a tank carries 3-4 men while a BTR-type armored personnel carrier provides transportation for 5-8 passengers in addition to its 3-man crew. This means human casualties will increase several times if the vehicle is defeated by hostile fire. This raises the acute issue of providing adequate protection for this kind of vehicles. Furthermore, battlefield tactics currently is not the same as it was previously. A fighting vehicle now needs to be protected in all directions, including the upper hemisphere, and one must think how this protection could be provided. It could be done by adding more armor, but this would change a light vehicle into a heavy one – the tank which would require more and more armor protection because existing levels of protection will never suffice. Therefore, thin-skinned ground combat vehicles need fundamentally new ERA and APS protections that they never had before, and these designs will certainly not replicate those developed for main battle tanks.

Microtec, in a private financing initiative project carried out jointly with state-owned enterprise «NII Orion», has been actively working developing ERA and APS designs for lightweight armored fighting vehicles, and it has already made significant progress in this direction. Basically, the initial, and major, portion of work on these future designs – lightweight ERA and APS systems – has been completed. Development and testing of mockup components of systems for protecting an armored personnel carrier from light AT-GW's have been finished. What remains to be done is to integrate the system with a vehicle and to test it as part of the vehicle. Afterwards, if there is interest on the part of the Ukrainian Ministry of Defense or foreign customers, it is fully realistic that these light systems would be launched into series production. This means to say that a substantial amount of work has been done. Ukraine has the capacity to provide both ERA and APS protections for the existing and future fleets of lightweight armored fighting vehicles.

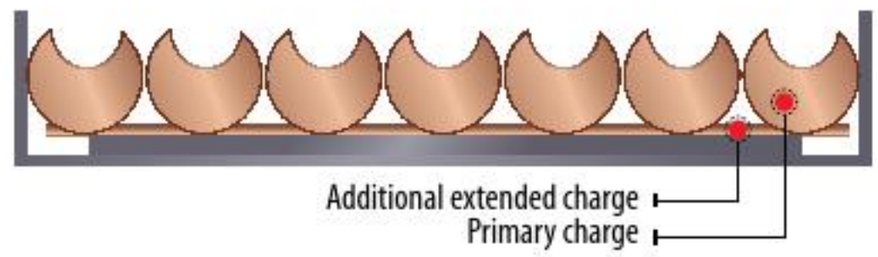

The new fire control system enables both the commander and the gunner of the Oplot MBT to better identify targets – and at longer distances – both in nighttime and daylight conditions.

UDR: What is the outlook for export markets?

V. Khytryk: We have currently cooperated closely enough with Poland. We have a deal signed with them to supply our motion platforms to equip trainer simulators. Furthermore, there is a realistic possibility of cooperation being expanded in areas of both AFV protection and simulation. There is a visible possibility of cooperation with the United States and other countries.

UDR: What distinguishes pricing policy of your company?

V. Kyryk: As far as pricing policy is concerned, I would put it thus: We have always been looking to make series production less labor intensive and to employ less expensive materials and technology. Sometimes we are successful in this effort, but sometimes we are not, due to some Government decisions among other things. As regards the 'Duplet' ERA design; we have been successful so far. Each 'Duplet' element of the ERA system will be 5-8 pct cheaper than the 'Nozh' ERA element.

UDR: What future do you think faces your company?

V. Khytryk: Protections for weapons and military vehicles were, are and will always be in demand. UDR

Interviewed by
Anton Mikhnenko, UDR

[bull's eye strike]

Serhiy Zghurets,
Defense Express

UKRAINIAN-BELGIAN TANDEM

MISSILE- FIRING GUN TURRET FOR UKRAINIAN FALARICK COOPERATION BETWEEN UKRAINIAN ARMS MAKERS AND BELGIAN MANUFACTURERS YIELDS NEW PROMISING PROJECTS

At Eurosatory-2010 defense exhibition, State Design Bureau Luch of Kiev, Ukraine's lead designer of ATGW missile systems, and Cockerill Maintenance & Ingénierie (CMI) of Belgium unveiled ATGW missile round Falarick 105 which can be launched from the Cockerill CT-CV 105HP gun turret. The CT-CV turret is armed with missile firing weapons. Designed for installation on all types of light armored platforms, it is being offered to manufacturers of armored military vehicles seeking to improve firepower capability of vehicles such as the 8x8 Patria, Piranha-3, Pandur-2, BTR-4 etc.

In 2013, it became evident that the number of partners participating in the Ukrainian-Belgian tandem has increased to three. At the IDEX-2013 arms exhibition, CMI Defence of Belgium, Luch of Ukraine and Doosan DST of South Korea unveiled a new concept demonstrator medium tank with a 120/150mm gun turret. The newl tank is a combination of the K-21 infantry fighting vehicle chassis, mated with the newly-developed Cockerill XC-8 lightweight concept turret. The XC-8 turret is designed to accommodate a low-recoil gun in 120mm or 150mm calibers.

The 120mm high pressure Cockerill gun, as claimed by its developers, provides excellent lethality against a wide range of targets. The gun can fire all of the 120-mm smoothbore NATO standard types of ammunition, as well as the Falarick 120 armor-piercing projectile which is fired from the bore of a gun to defeat heavy armored vehicles at distances of up to 5 kilometers.

Elevating to +42°, this weapon delivers exceptional engagement capability in complex terrain, an indirect-fire HE capability to 10km range, and the Gun Launched Anti Tank Guided Missile (GLATGM) permits heavy armor to be enagaged at extended ranges. As a matter of fact, the Falarick 120 projectile currently being promoted on the export market is a version of the 120mm Luch guided missile system 'Konus'(ready-to-fire weight – 22.3 kg, armor piercing capability – 700mm of RHA behind ERA).

The Cockerill 105 mm high pressure gun provides a wide choice of ammunition to suit the tactical situation; it fires all NATO-standard 105mm types and the Falarick 105 GLATGM (ready-to-fire weight – 25.2 kg, armor piercing capability – 550mm of RHA behind ERA).

Both guns are employed using a common high performance, digital, fully-stabilised, day/night weapon control system. Turret weight is kept low through the use of a bustle-mounted autoloader, which permits the turret crew to be reduced to two. The Cockerill XC-8 concept-turret draws on the proven modular technology of the Cockerill CT-CV 105HP turret.

The turret was shown at IDEX integrated onto the South Korean Doosan K21 hull, which is already in production for the Republic of Korea Army in the infantry fighting vehicle configuration,

The newly developed concept medium tank with a 120mm/105mm gun is a combination of the K-21 infantry fighting vehicle's tracked chassis, mated with the newly-developed Cockerill XC-8 turret and Ukrainian missiles

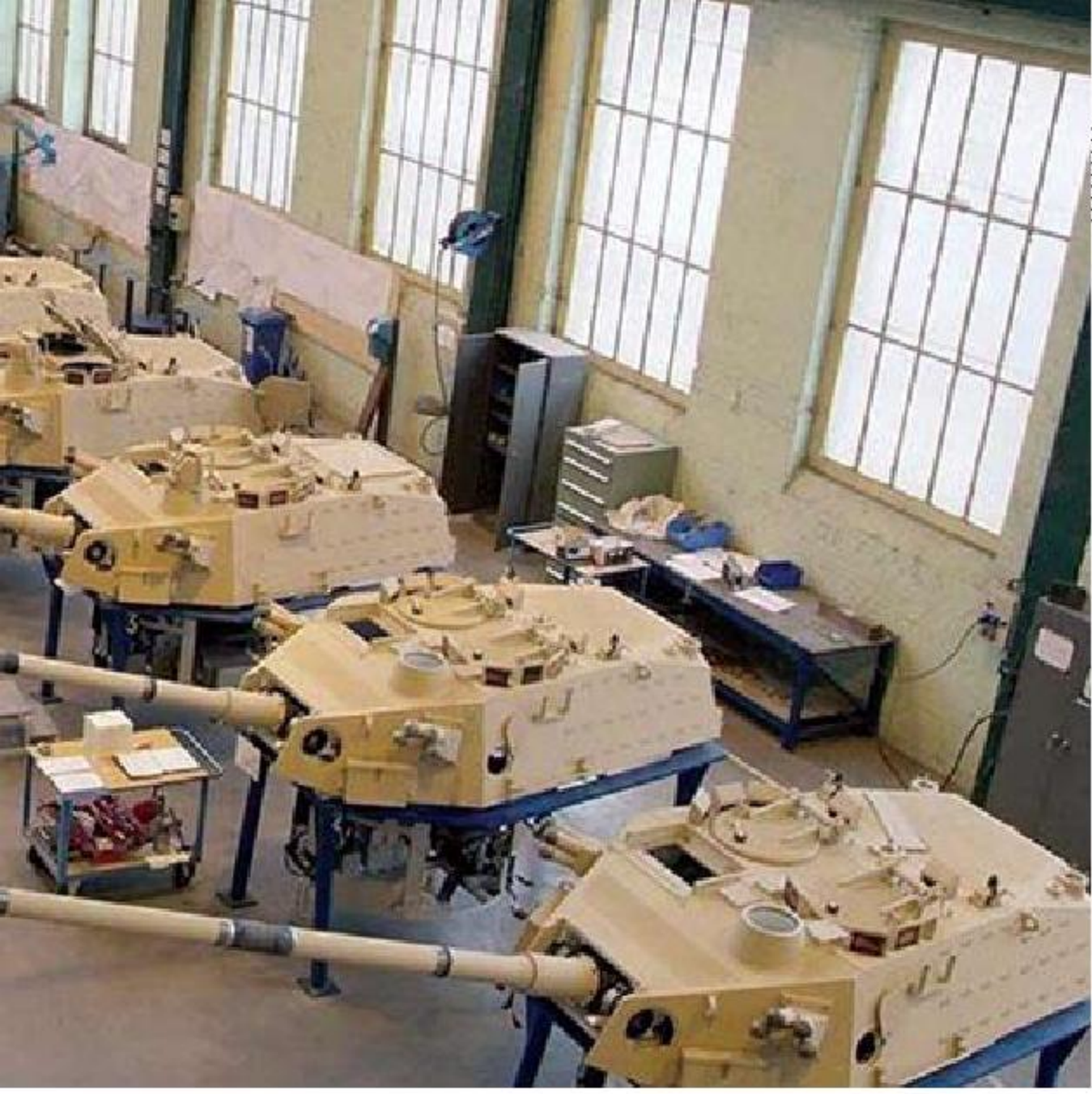

At the IDEX-2013 arms exhibition, CMI Defence of Belgium, Luch of Ukraine and Doosan DST of South Korea unveiled a new concept demonstrator medium tank with a 120/150mm gun turret.

with the complete system weighing 25 tonnes. The combination of the Cockerill XC-8 concept-turret with the Doosan K21 chassis promises a significant advance in terms of medium-weight direct-fire capability. Tactical mobility and flexibility is further enhanced by the vehicle's ability to swim without assistance at full combat weight.

Also shown at IDEX was the 16-t BTR-3E (8x8) armored personnel carrier (APC) from Ukraine fitted with the latest Cockerill CSE 90LP two-person turret. The latter is armed with a low-pressure 90mm smoothbore gun that can fire a wide range of ammunition. This project is being promoted by Ukroboronservice State Concern, while State Enterprise 'Machinery and Repair Plant of Kiev' manufactured the baseline APC with an expanded-diameter turret ring to accommodate a heavier turret. According to statements made by CMI Defence officials at IDEX 2013 exhibition, the BTR-3 APC fitted with new Cockerill CSE 90LP turret will carry a price tag of some USD 2 million. Missile rounds are so far not listed in the selection of ammunition types available for the BTR-3E/Cockerill CSE 90LP medium tank. In the meanwhile, Luch has completed the development of a new 90mm antitank missile with a tandem warhead, which was revealed at IDEX exhibition as Falarick 90. UDR

CONTROLLED FAMILY

GUIDED MISSILE FALARICK 120

GUIDED MISSILE FALARICK 105

ROUND AND GUIDED MISSILE FALARICK 90

[arsenal]

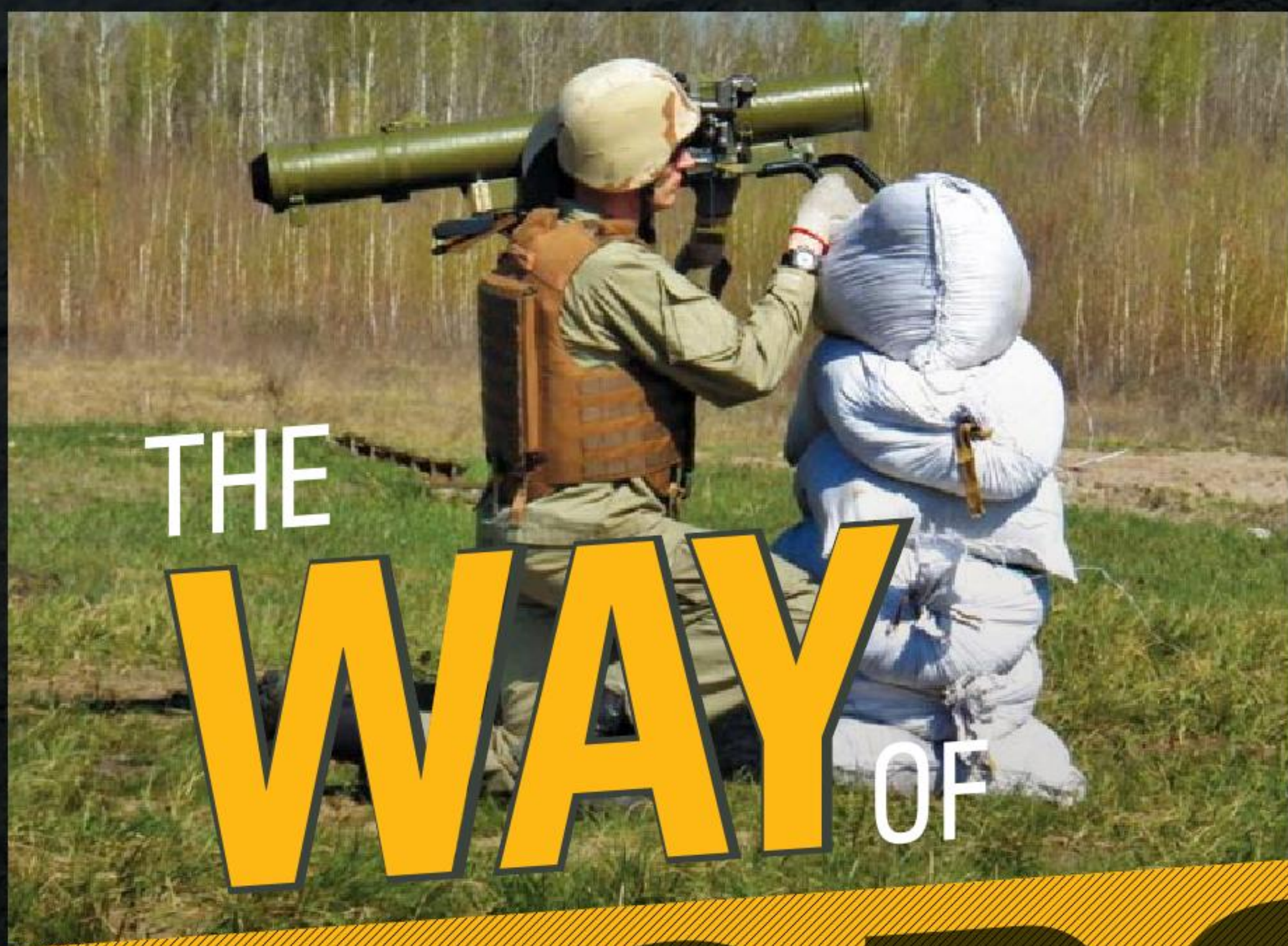

THE WAY OF KONS

ARW

Serhiy Zghurets, UDR

New Multi-purpose man-portable ATGW missile launch system

In Ukraine, new anti-tank missile system and launcher, the Korsar, which was developed by State Design Bureau 'Luch' of Kiev, has successfully completed its test program. As claimed by the designers, this new multi-target defensive-offensive weapons system is superior in several performance parameters to the established world-market counterparts. The 'Korsar' man-portable anti-tank missile system was being developed with a clear perception that infantry units in Ukraine and other countries will demand more and more precision-guided multi-target systems that are light in weight but highly lethal.

The fire from "Korsar" by guided missile R-3

The designers of the Korsar AT-GW missile system sought to produce a system that would meet all the requirements placed by potential users on weapons in this category, specifically, high probability of success, low cost, operational versatility, terminal effectiveness, practicality of carriage and low weight. The Korsar is designed to fire the R-3-type armor piercing missile, whose layout design, dimensions and guidance system have had their impact on overall image of the Korsar. The initial proof-of-concept examples of the Korsar that were demonstrated in 2006 looked bulky enough. So the configuration and equipment payload of the man-portable system underwent substantial improvements to make the system lighter weight and less bulky. The resulting configuration is a user-friendly, ergonomic weapon.

In its mass and size, the Korsar is coming closer to handheld anti-tank grenade launcher systems, being at the same time far superior in terms of effective range, first-round hit probability and lethality. With its 2.5-km rage (twice as longer as that of a handheld grenade launcher), the Korsar is designed to defeat hostile armored equipment, missile launchers, hostile guns operated from fortification works or urban buildings, enemy soldiers sheltered therein, and other types of small targets – under day and night conditions. Where appropriate, the Korsar can be used to engage hovering helicopters and remotely piloted aircraft.

Ready to fire, the system weighs 18 kg, including the 13.5-kg missile housed in a storage/transport/launch canister. The system will operate within a temperature range of minus 40 degrees to plus 60 degrees Celsius, while its American and Israeli counterparts are not designed to operate at temperatures under minus 20 degrees Celsius.

Due to compact dimensions and low weight, the system can be configured into 'packs' for long-distance transport. The Korsar is transportable by all conventional transport facilities, and it is also airdroppable. When used auton-

The fire from "Korsar" by unguided projectile

omously, it is operated by three personnel who can carry an allowance of up to five ready-to-fire missiles (in a "packed launcher with one missile + two missiles + two missiles" configuration), in addition to their personal weapons. The system will take no longer than 15-20 seconds to go from stowed to ready-to-fire configuration and backward, and will be able to fire three to four missiles per minute. The man-portable ATGW missile system Korsar is suitable for operation from both prepared and improvised emplacements; from the prone, from the sitting or from the foxpole standing positions; from different fighting vehicles and over the water surface. For operation from within buildings, a free space of at least two meters behind the launcher will be required.

The tandem-charge warhead of the R-3 missile perforates a 550-mm-thick core armor behind ERA when fired from 50 to 2,000 meters away. For an improved operational versatility, the missile can be configured to carry a thermobaric warhead to produce a blast effect equal to that of a large-caliber gun round. A thermobaric warhead is especially efficacious against buildings, urban constructions and field fortification structures. Sheltered targets can be defeated even without the need of penetrating the shelter, provided they are non-pressurized. The missile is also suitable for missions such as breaching safe passages through mine fields or non-explosive obstacles.

The Korsar uses semi-automatic laser-beam guidance system and offers high resistance to electronic countermeasures influence. The guidance mode selected y Ukrainian designers of ATGW missiles differs from that used for the U.S. 'Hellfire' and Israel's 'Lahat' semi-active laser riding missile designs. The latter two use conventional technique, in which a laser beam is aimed to the target, while the seeker directs the weapon toward the target by following the spot produced by the laser beam. However modern tanks and other moving targets are all fitted with protective systems which are activated once a laser emission is detected, and can 'blind' an incoming threat or divert it from its designated trajectory. The Ukrainian ATGW missiles are guided by a laser beam that is directed not to the target but the tail of the flying missile where the signal receiver is positioned. This is what gives the Korsar a 'low probability of intercept' capability.

Ready to fire, the system weighs 18 kg, including the 13.5-kg missile housed in a storage/transport/launch canister. The system will take no longer than 15-20 seconds to go from stowed to ready-to-fire configu-ration and backward, and will be able to fire three to four missiles per minute.

The Korsar missile launch system has excellent competitive advantages in terms of cost-effect ratio. At USD 130,000 plus some USD 20,000 per missile, the Korsar will be much less expensive than same-class counterparts originating in the U.S. or Israel, and low cost is what makes it particularly suitable for mass production. This ATGW system offers an optimal combination of performance and operational parameters, enabling the weapon to be used as 'effect generator' in land, air assault and counter-terrorism warfare scenarios. The extensive tests showed that the anti-tank missile launch system 'Korsar' is a highly lethal and highly effective multi-target offensive-defensive weapon. UDR

SDB

Dmitriy BOGDANOV,
Volodymyr TKACH,
Defense Express

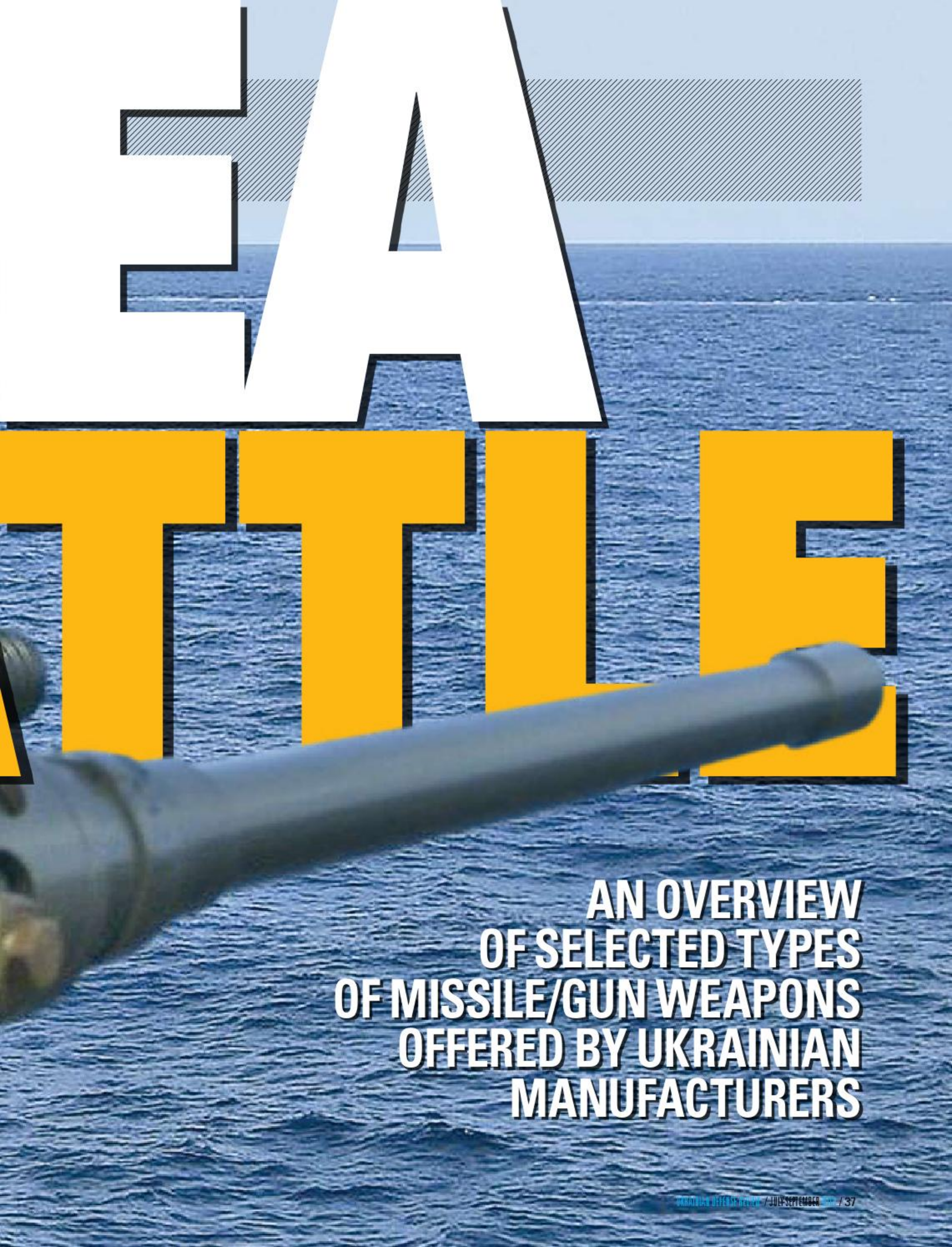

AN OVERVIEW OF SELECTED TYPES OF MISSILE/GUN WEAPONS OFFERED BY UKRAINIAN MANUFACTURERS

The Ukrainian Navy Headquarters is completing work to draft Navy development concept projected into up to 2025. Although there is no full clarity yet, it is already apparent that a significant focus will be given to both lighter tonnage vessels and small armored boats for operation on the rivers and coastal waters.

Particularly in January 2013, the Department of the Ukrainian Navy River Squadron was set up in Odessa. The Navy river fleet will perform policing and border control missions on rivers, lakes, estuaries as well as in open harbors and littoral waters. The initial intention was to enlarge the Navy fleet in 2013 by adding first- and second-of-class Project 58155 Giurza-M-type armored gunboats that have been under construction at Leninska Kuznia shipyard in Kyiv since October 2012.

Given the wide range of the challenges being handled and the insignificant number of new ships being built, the selection of weapons becomes of particular importance. Note that developers of hybrid gun missile weapons systems for naval purposes have shown up in Ukraine. Naval weapons are distinguished by the need to take account of constant exposure to fluctuations of the water surface, the speed and course of the host boat or ship, the impact of moisture condensation on constituent components and assemblies of military equipment, and the limitations placed on the weight and dimensions of the shipboard combat module, depending on the class of the ship.

FROM KATRAN TO ARBALET

The first example of a Ukrainian naval weapons system that is supplied both to domestic customers and for the export market is combat module 'Katran-M' BM-5M.01. Modules of this type were installed on the Bata-class patrol vessel of the Equatorial Guinea's Navy in 2012. The Bata vessel belongs to the SV-01 class (also known as 'Kasatka' class), developed by the State-owned enterprise 'R&D Center for Shipbuilding' in Mykolayiv, under the auspices of the Ukrainian-British 'Fast Craft Naval Supplies (UK) Limited' joint venture.

Exteriorly, the Katran-M module looks like naval counterpart of the multipurpose remotely controlled weapons station 'Parus' (developed and manufactured by KMDB of Kharkiv) seen on the new Ukrainian armored personnel carrier BTR-4. The Parus and Katran-M are similar in dimensions and have similar weapons compositions that both include a 30mm rapid firing gun, a coaxial 7.62mm machine gun, a Baryer-V class antitank missile system, an automatic 30mm grenade launcher and a smoke grenade launcher system. Yet the Katran-M has had its total weight reduced to 1,300 kg, compared to 1,700 kg (including an allowance of ammunition) for the Parus. The turret on the Katran was designed with the possibility of traverse through +360o, but in actual fact the traverse angles are limited within a certain range. The weapons can be elevated from -16° to +45°.

Missile system Baryer-V developed by the State-owned Design Bureau 'Luch' in Kiev. These system also includes observation and aiming device 9SH350I1 (9Ш350И1) designed and manufactured by Izyum State-Owned Instrument-Making Plant. It includes two (wide and narrow field-of-view) television cameras, a thermal imaging camera and a laser range-finder. The fire control equipment suit is designed in the form of two terminals (each including a display and control console) – one for the commander and the other for the gunner. Firing at ground, surface and air targets can be carried from both the commander's and gunner's stations. For compensation of pitching and rolling

Exteriorly, the Katran-M module looks like naval counterpart of the multipu rpose remotely controlled weapons station 'Parus' (developed and manufactured by KMDB of Kharkiv) seen on the new Ukrainian armored personnel carrier BTR-4. The Parus and Katran-M are similar in dimensions and have similar weapons compositions.

of the vessel, pitch and roll measurement data is used. The weapons stabilization system ensures reliable operation with a consistent pitch of 15 degrees, a longitudinal inclination of up to 5 degrees and a lateral roll of up to 15 degrees per 6-9 seconds. The pitch and roll measuring device is positioned separately from the shipboard combat module.

Based on experience with operating missile weapons from the Katran-M combat module, Luch has designed and brought into production a more capable shipboard weapons system armed with guided ammunition rounds. The Arbalet-K missile system is optimized for air defense missions. In addition to MANPADS Igla missiles, it can fire Ukrainian upgraded similar-class counterparts offering enhanced performance capabilities. By the same token, the Baryer-VK, unlike the Katran, can fire more capable R-2V missiles. Kazakhstan's Navy has become the launch export customer for the two weapons systems.

The Impuls-2 family of weapons stations subsumes an array of opto-electronic target detection sensors, a gyrostabilization unit that provides stabilization in elevation and traverse, and an automatic target acquisition and tracking system.

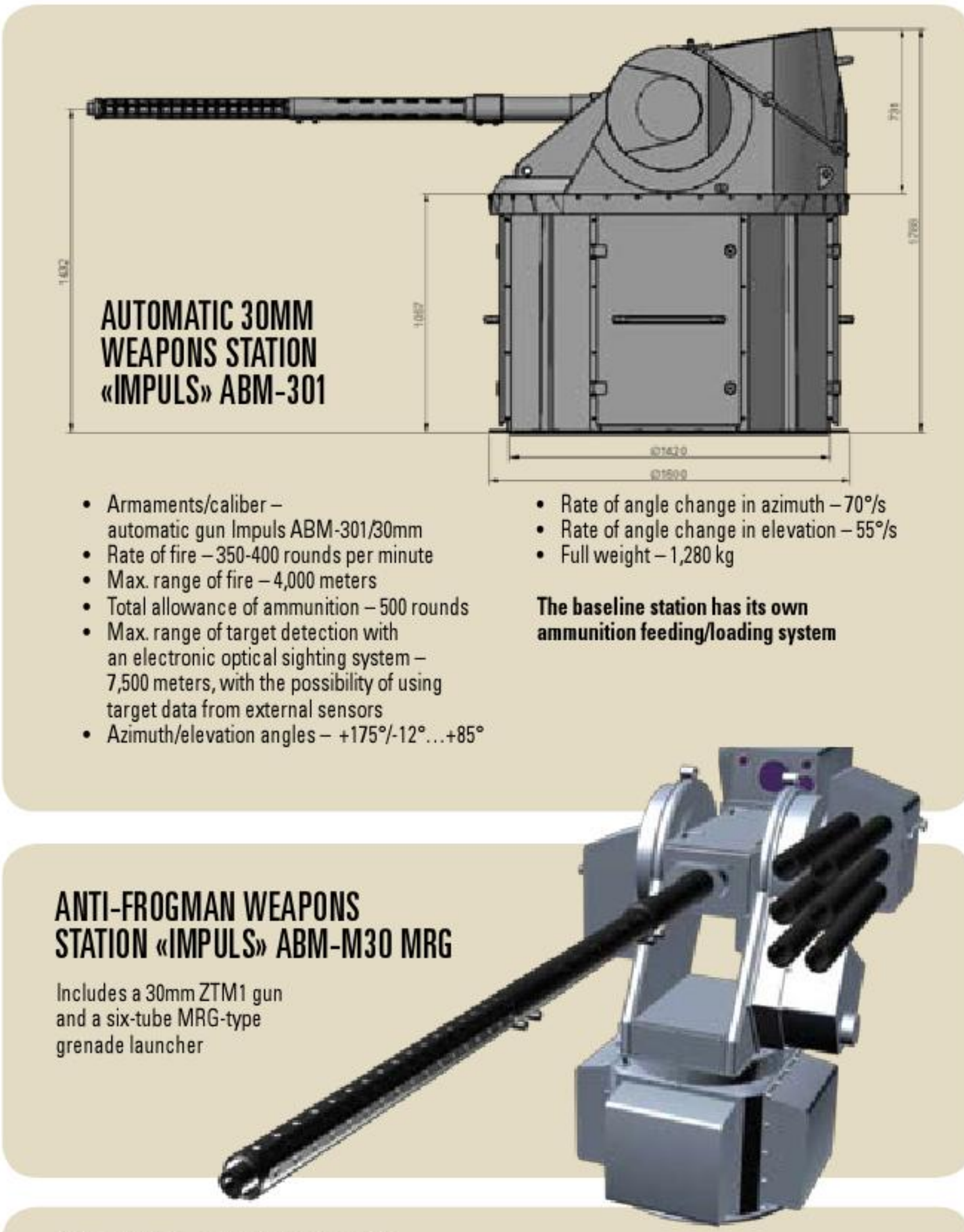

PULSE WEAPONS

In Sevastopol, privately-owned shareholding company "R&D Enterprise Impuls-2" has operated for two decades now. A designer team from once powerful Apparatus Factory "Mayak" had gathered around themselves engineers from at least four defense-related companies in the same city. The Company currently focuses on building full-mission electric equipment simulators for training the personnel of nuclear power plants and nuclear submarines; and also develops digital steering control systems and weapons control systems for naval ships. Impuls-2 has launched a service to repair and overhaul the full range of hybrid gun/missile and torpedo weapons systems for Ukraine's Navy and Coast Guards customers.

Under the direction of Admiral V. Maksimov, assistant to Ukraine's Minister of Defense, an operational demonstration (preliminary factory testing) of the automatic "Impuls-301" naval weapons station took place on June 20, 2013. The event included an operational demonstration of the 'Impuls-301' automatic weapons station with a 30mm gun, as well as a presentation of overall information on the Company's family of naval weapons stations and its near-future plans concerning the development of automatic naval guns in 57mm and 100mm calibers.

The Ukrainian-designed automatic 30mm ZTM-1 gun seen on the Impuls-301 weapons station has an aiming range of up to 4,000 meters and is designed for engagement of surface, air and ground targets. The station employs an image-intensification television-based day/night sight integrated with a laser rangefinder for fast and highly accurate detection, identifica-

tion and engagement of air targets out to 7,500 meters. It can use target data from external ISTAR systems and can be easily integrated into the ship's C3I system or an automated perimeter surveillance system.

According to officials at Impuls-2, the Impuls-301 weapons station is designed to defeat aerial threats (both unmanned or piloted, including sea-skimming anti-ship cruise missiles), small fast sea-going vessels, soft and lightly armored ground targets, as well as for blowing up floating mines.

As claimed by the designers, the special feature of the range of demonstrated weapons stations is that they are not 'navalized' versions of the existing ground systems with all their inherent deficiencies, but were designed specifically for equipping ships and craft of the Ukrainian Navy and State Border Service's Coast Guard forces. The weapons were designed with due account taken of the special demands placed on the equipment for seaborne use. Those include not only increased overloads brought on by the rocking motion of the carrier vessel, but also substantially extended ranges and stringent performance standards applied to detection systems and the accuracy of servo drives, the elevation and azimuth angles and performance of the control system as a whole.

The Impuls-2 family of weapons stations subsumes an array of opto-electronic target detection sensors, a gyrostabilization unit that provides stabilization in elevation and traverse, and an automatic target acquisition and tracking system. An all-digital fire control system interfaced with high-precision power drives provides a substantial increase in combat effectiveness of the weapon when firing at hostile aircraft. Digitalized systems, in contrast to their electro-mechanical counterparts, are distinguished by high stability of selected equipment settings. Moreover, they ensure reliable operation and the ability to easily change the selection of weapons with different ballistics properties and to easily integrate weapons stations into a combat information management system, thus enabling all the available assets and capabilities of the ship to be used to best effect. A multi-channel electro-optical sighting system consisting of a television camera, an infrared camera and a laser rangefinder ensures reliable operation under low light conditions at distances of up to 7.5 km. Engineers have worked out an additional option to install an optical-electronic sighting system that will be fully effective at ranges of up to 25 kilometers.

The widest possible customer-specific selection of payloads enables the weapons stations to be installed on both large combat platforms and small gun-boats with relatively low tonnage capacity. In addition to the basic automatic weapons station with an automatic 30mm gun (ABM-301),

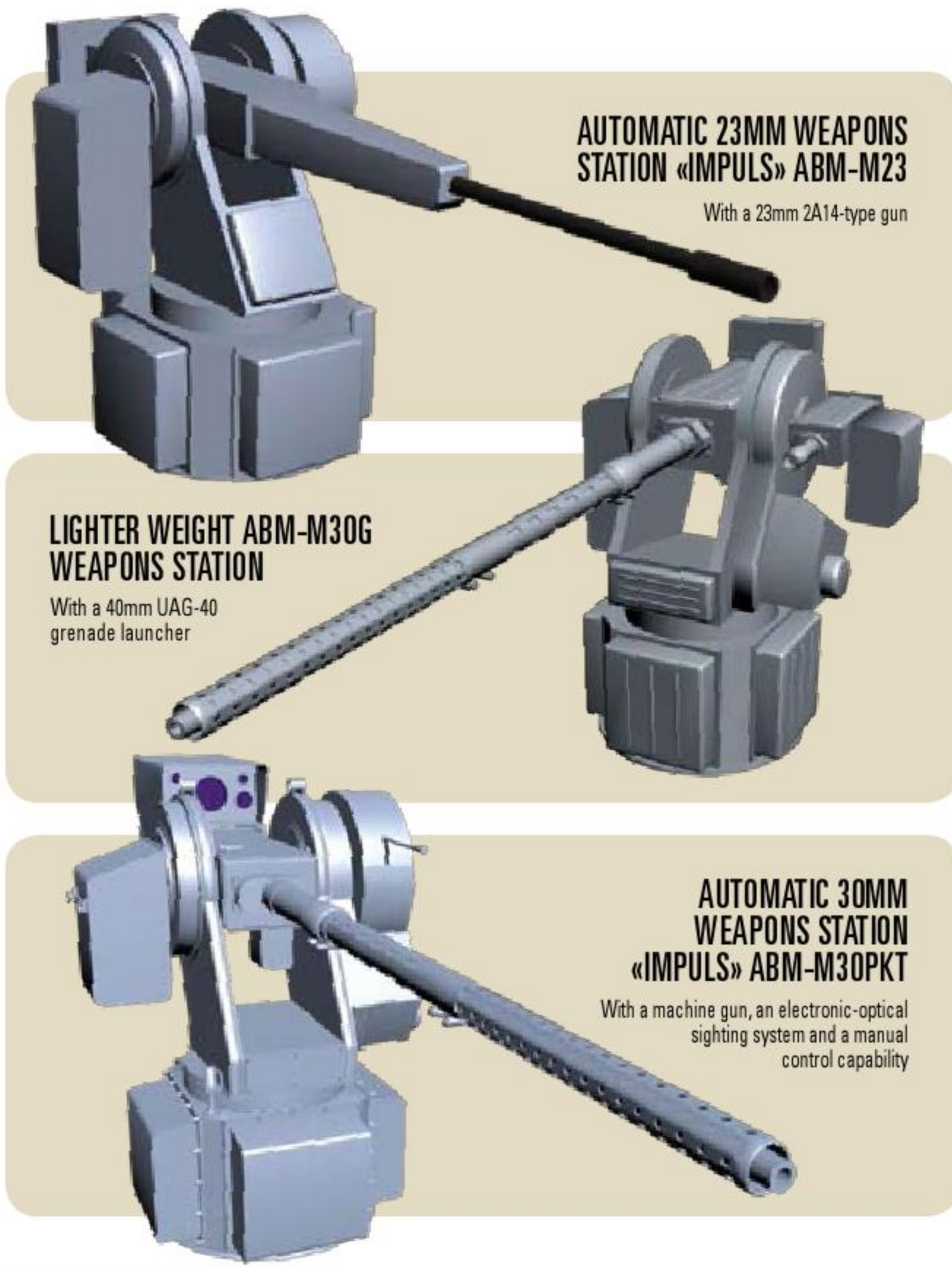

options with different selections of weapons have been developed, including: 23mm 2A14 gun; a 30mm gun plus 40mm UAG-40 (ABM-M30G) grenade launcher; a gun plus an RG-55 (ABM-M30 MRG) rocket grenade launcher; two launchers with six ready-to-fire RG-55 (ABM-MRG) rocket grenades; a 30mm gun coupled with the Baryer (ABM-301RK) missile system; a 30mm gun coupled with a 12.7mm PKT (ABM-M30PKT) machine gun.

By the way, Izyum device 9SH350I1 (9SH350I1) is also used in some of these systems. The 140mm shipboard weapons system MLRS (ABM-R9) has been developed for support of sea-borne landing operations. The weapons station has been the one that, along with a gun missile system, attracted most interest on the part of Ukraine's Navy leadership. As noted by those who attended the demonstration, the demonstrated weapons stations are "by an order of magnitude" better than what the industry could offer naval seamen previously.

VICE CONCLUSIONS

The emergence of gun missile systems, designed in Ukraine specifically for naval applications and made of Ukrainian assembly parts, gives hope that the potential of Ukraine's shipbuilding sector would be used to its full capacity – by offering the market integrated complex solutions in the form of finished products, rather than projects or individual component technologies. The demonstrated weapons stations are suitable for installation not only on newly built platforms but could also be included in upgrade packages for the already used craft and vessels. UDR

BARYER-VK

The Baryer-VK naval guided missile system is designed to engage hostile ships, current-generation armored ground targets (both stationary and moving), lightly armored targets, coastal pillboxes and helicopters.

SPECIFICATIONS

Max. effective range ..... 7,000 m
Time of flight to maximum range ..... ≤ 30 s
Range of detection of a tank-size target: ..... 10 km (at day); 7 km (at nigh)
Effective slant range ..... 500...5,000 m
Full weight ..... 1,020 kg
Full dimensions ..... 2,412 x 1,334 x 1,876 mm

Rotation angles of the platform relative to the ship's axles:
Azimuth ..... -150°...+150°
Elevation ..... -25°...+60°
Operating temperature range ..... -40°...+60°

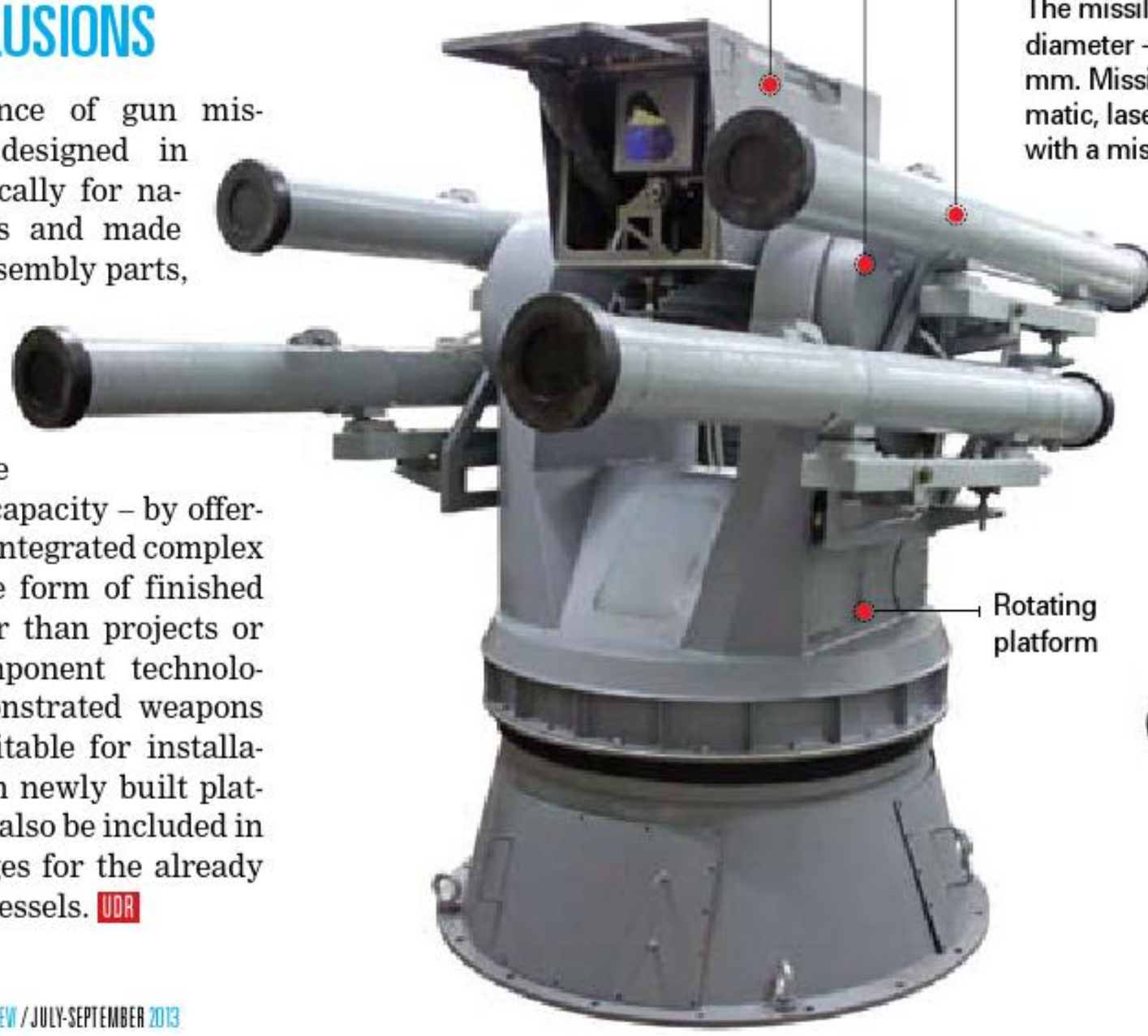

ARBALET-K

Short-range naval air defense missile system 'Arbalet-K' uses Igla man-portable air-defence system (MANPADS) missiles to engage aircraft and helicopters on pursue and lead-collision courses. It visually acquires and tracks targets using an electro-optics package, with the missile itself tracking the target after launch using passive infrared seeker.

Launcher with four guided missile «IGLA»

Rotating platform

Remote control

Designer
State Design Bureau «Luch»

SPECIFICATIONS

Max. effective altitude for targets of a jet-propelled aircraft type:
On lead-collision courses ..... 2,000 m
On pursue courses ..... 2,500 m

Max. effective altitude for targets of helicopter and turbo-propelled aircraft types:
On lead-collision courses ..... 3,000 m
On pursue courses ..... 3,500 m
Min. effective altitude ..... 10 m

Target speed:
On lead-collision courses ..... 360 m/s
On pursue courses ..... 320 m/s
Effective slant range ..... 500...5,000 m
Full weight ..... 1,020 kg

Rotation angles of the platform relative to the ship's axles:
Azimuth ..... -150°...+150°
Elevation ..... -25° ...+60°
Operating temperature range ... -40°...+60°

Some combat boats and ships, which are designed/manufactured in Ukraine, can be equipped by national weapon.

The Impuls-2 company in Sevastopol, Ukraine, is working on a range of private financing initiative projects regarding the development of new naval weapons stations. This private-sector company is involved in the upgrading of selected types of weapons systems installed on the Ukrainian Navy's and State Border Service's ships, and also performs sub-contracted works under export deals. Particularly, Impuls-2 installed gun systems on Bata-class patrol vessel of the Equatorial Guinea's Navy in 2012. Also in 2012, Impuls-2 disclosed its plans regarding the development of an integrated remote weapons station for small naval vessels, optimized for different automatic guns in 23mm, 25mm and 30mm calibers as well as missile weapons. Seen here is an automatic 30mm weapons station Impuls-ABM-301

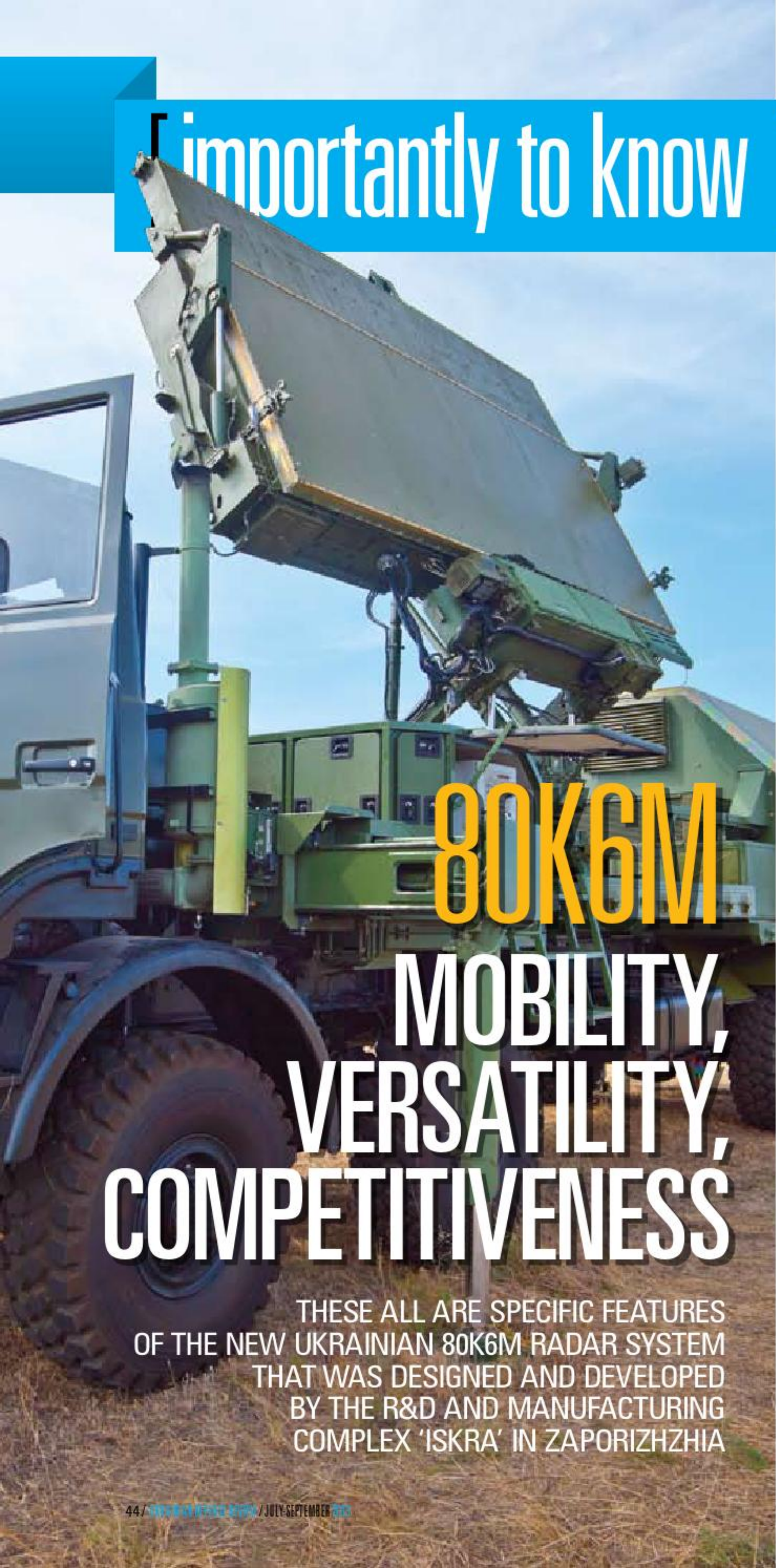

80K6M MOBILITY, VERSATILITY, COMPETITIVENESS

THESE ALL ARE SPECIFIC FEATURES OF THE NEW UKRAINIAN 80K6M RADAR SYSTEM THAT WAS DESIGNED AND DEVELOPED BY THE R&D AND MANUFACTURING COMPLEX 'ISKRA' IN ZAPORIZHZHIA

Radiolocation is one of promising sectors of the Ukrainian defense-industrial complex, which has good opportunities and potential for growth and expansion. State-owned Enterprise 'R&D and Manufacturing Complex 'Iskra' is top designer and manufacturer of active radar equipment in Ukraine. That enterprise has recently designed and built, under an order from a foreign-country customer, new 3D all-round-looking 80K6M radar system for military purposes. Defense Express has talked about the 80K6M radar system with Vyacheslav Trailin, deputy CEO in charge of R&D at Iskra.

Defense Express (DE): Your enterprise has recently unveiled new vehicle-carried three-dimensional 80K6M radar system. What makes it fundamentally different from the previous model, the 80K6? What new technical solutions have been implemented in the new design?

Vyacheslav Trailin (VT): There are several fundamental differences. First, this is a wider scan sector in elevation; it now covers 55 degrees compared to 35 degrees for the 80K6, which is necessary for detecting ballistic targets.

Second, this is the number of carrier platforms required, as well as deployment time from unpack to operation. For the 80K6M, the number of carrier platforms was reduced to one from two, and set-up time reduced to six minutes from 30 minutes in the 80K6.

To fulfill these requirements, we had to develop a new digital beamforming system and apply

new algorithms for computing antenna beams.

DE: Does the new design employ domestic or foreign-made component technology?

VT: While developing and building radar technology designs, we have traditionally looked at the quality of the parts and assemblies employed, rather than their country of origin, given that a sophisticated and complex system such as radar is highly sensitive to the quality of its constituent materials and assembly units, upon which reliability of the resulting system will directly depend. Thus, we actively employ both imported and domestically manufactured assemblies, especially there where this would directly define performance capabilities.

DE: The 80K6 'Pelikan' radar system used to be assigned to an S-300 SAM battery in situations where battlefield missions had to be carried out autonomously from a relevant regimental command post. What challenges will the 80K6M handle, and what units will benefit from its work?

VT: The 80K6M radar can be used for the provision of target data to any kind of SAM system, especially a mobile one – since it was created precisely for handling challenges of this kind.

DE: With what foreign-designed counterparts will the 80K6M compete on the market?

VT: In terms of its performance capabilities, the system's closest rivals include the AN/TPS 78 manufactured in the U.S.A. and the Thales Raytheon Systems GM400 of France. But our product has an advantage in aspects such as mobility and price.

DE: The 80K6M is currently housed on a Belorussian MZKT truck chassis. Are you considering deploying it on a domestically manufactured platform such as one manufactured by Kremenchuh motor works?

VT: Yes, we are now developing a configuration that is optimized precisely for a KrAZ chassis.

DE: Is there any interest in the new radar system shown on the part of the Ukrainian Defense Ministry? What is the likelihood of this technology being procured for the national armed forces?

VT: There is some degree of interest, indeed. But at the time being, our company supplies the radar to export customers only. The 80K6M is our most latest development that has been brought to serial production. So it is only reasonable that the technology generates much interest among the potential export customers who come to see our company. UDR

Interviewed by
ANTON MIKHNENKO

Ukrainian radar designs and their foreign counterparts in comparison

	80K6M	AN/TPS 78	GM400
Operating frequency range	S	S (2,8-3,1 ГГц)	S (2,9-3,3 ГГц)
Number of coordinates being measured	3	3	3
Detection range, km	400	445	470 / 390
Maximum detection altitude, km	up to 30.5	up to 3	up to 30.5
Coverage in elevation, degrees	0...55°	20° и 30°	20° и 40°
Scan time, s	5, 10	–	10
Clutter suppression coefficient, dB	>50	>50	>50
Beamforming method	digital	digital	digital
Deployment time, min	6	<30 by 4 person	<30 by 4 person
Operating crew	3	4	4
Free-air temperature range, °C	-40 - +50°C	-30 - +55°C	-30 - +55°C
Number of carrier platforms required	1	1	1

80K6M

3D ALL-ROUND LOOKING RADAR SYSTEM

The 'Iskra' R&D and Manufacturing Complex has designed a new radar system, the 80K6M, derived from the 3D all-round-looking radar system 80K6 that has been in service in the Ukrainian Armed Forces since 2007.

Design authority
R&D and Manufacturing Complex «Iskra»,
Zaporizhzhia

The 80K6M is a vehicle-carried three-dimensional all-round-looking radar system designed to detect and track airborne targets flying at low, medium and high altitudes. If deployed with radio-radar or surface-to-air missile units within Air Defense Forces, the 80K6M is used for target data generation for control systems of air defense missile weapons. The 80K6M radar system offers capabilities as follows:

- The detection and tracking of air targets;
- The detection, tracking and 3D location and cruising speed measurement of air targets;
- Friend-or-foe identification of air targets;
- Determining azimuth and elevation bearings of active jamming dispensers;
- Feeding output data into radar workstations and related systems

It can operate independently or as part of regional or national C4I networks. This technology offers high resistance to environmental and electronic countermeasures influences.

DETECTION RANGE FOR FIGHTER-SIZE TARGETS *

with DCS = 3-5 m2,
with P=0.8, F=10-6, km

до 200 км
at altitude of 10 km

40 км
at altitude of 100 m

400 км
at altitude of 10-30 km

THE GENERAL APPEARANCE OF THE 80K6M RADAR SYSTEM

In carrying configuration – with the antenna collapsed

In operative configuration – with the antenna deployed

This link provides access to a video on the **80K6M** radar

Strategic mobility

The 80K6M radar system is air transportable on An-70-type military transports or similar aircraft types with a suitable-capacity cargo bay.

Operating crew

Carrying platform

The full 80K6M radar installation finds enough room onboard a single vehicle. It is transportable on a rugged terrain truck chassis – Ukrainian or foreign made depending on specific customer requirements. The 80K6M radar installation intended for the export to Azerbaijan is seen here deployed on a Belorussian MZKT truck chassis.

Key advantages of the 80K6M radar system
- digital phased array antenna,
- high deployability,
- short deployment time

80K6M Radar System: Key Specifications

Operating frequency range	S
Number of operating frequencies	6
Indicated range, km	400
Number of scan sectors in elevation	2
Mode switching time, s	0,1
Scan sector in elevation, degrees	
In mode 1	0...35
In mode 2	0...55
Scan time, s	5, 10
Clutter suppression coefficient, dB	>50
Method of beamforming	digital
Number of antenna beams	12
Root mean square error of measurement in the absence of electronic countermeasures influences:	
For range, m	100
For azimuth, min	20
For altitude at ranges up to 100 km, m	
In mode 1	300
In mode 2	400
Free-air temperature rage, degrees Celsius	-40 +50 c
Number of carrier platforms required	1

6 minutes is time needed for emplacement/ displacement of the 80K6M radar installation. The short time into and out of action contributes to the system's survivability on the battlefield. The antenna folding process is extensively automated.

Operator
Carries out control of the radar system from a computerized workstation. Airpicture data is transferred automatically via digital datalinks to air defense control centers and, directly, to SAM battery control centers. The 80K6M radar could be employed for support of autonomously operating Buk-M1 or S-300PS batteries and more types of fire units.

The spectrum of Ukrainian-Norwegian relation can be expanded through the development of military-technical cooperation

VOLODYMYR RUBTSOV

PRESIDENT, INTERNATIONAL CHARITY ORGANIZATION «INTERNATIONAL FOUNDATION FOR SOCIAL ADAPTATION»

BILATERAL COOPERATION WITH NORWAY IN THE FIELD OF SOCIAL ADAPTATION OF RETIRED SERVICEMEN IS VERY IMPORTANT FOR UKRAINE

Amid the rapid reduction of the Ukrainian armed forces, from the current 182,000 to 122,000 personnel in 2017, the process of military-to-civilian transition of Armed Forces Reserve retirees is becoming even more important. Against this background, the role of the Government and different foundations is increasing further still. After all, people who may just find themselves out of job are those who, with their vast military background and individual knowledge, could still serve their country but have difficulties adjusting themselves to the present-day civilian environment.

In Ukraine, the International Foundation for Social Adaptation has worked for ten years now, implementing bilateral Ukrainian-Norwegian project aimed at the provision of employment and training to retired uniformed members of the security sector. Defense Express met with Volodymyr Rubtsov, IFSA's President, to ask questions regarding the current issues and outlook of career transition assistance projects for military service retirees.

Defense Express (DE): What reasons led to the establishment of your foundation?

Volodymyr Rubtsov (VR): The International Foundation for Social Adaptation (IFSA) was founded on 13th December 1998 by George Soros, seven years after "Social Adaptation of Military Personnel" (SAMP) program was launched in Ukraine by Renaissance International Foundation (G. Soros'

foundation for Ukraine). This program succeeded the Social Adaptation of Military Personnel Program that was ranked by the United States Agency for International Development (USAID) to be one of the world's Top 20 most effective social programs in terms of human resources management in 1996.

The program eventually expanded to cover all of Ukraine and had the potential to become international in scope. At the time, it was the biggest ongoing program by Renaissance Foundation; its outputs fascinated the experts:

- Employment and training assistance was provided to some 80,000 retired Armed Forces officers and eligible Family members;
- The program covered not only retired Armed Forces officers but other elements of society with similar needs;
- A nation-wide career transition assistance network for retired uniformed military service members and their Family members was set up to include 34 regional centers for social adaptation (CSA) that were directly responsible for organizing SAMP programs at the local level.

As the Program was growing in scope, its areas of interest were expanding and priorities shifting toward facilitating job creation for target persons through the promotion of small private sector growth. In 1995, the SAMP program supported the creation of business-incubators and entrepreneurship support centers throughout Ukraine; with direct participation of SAMP program, the Ukrainian Association of Business Incubators and Innovation Centers (UABIIC) was set up in 1998.

The SAMP program gradually expanded to reach countries such as the Russian Federation, Bulgaria, Belarus ad Moldova. Since 2003, Norwegian project "Professional training and employment assistance of military personnel and their families" is carried in Ukraine.

DE: What are project stakeholders? What outputs has the project generated to date?

VR: The project involves 11 Ukrainian universities and the University of Nordland (Norway), which are responsible for the provision of career training courses to military service retirees and their Family members in 14 different areas of specialty. Three Ukrainian Armed Forces Veterans' organizations assist in setting up student groups, in psychological rehabilitation programs and employment promotion programs. Experts and enterprises in respective localities are engaged to provide legal advice and business startup training.

The Project is closely engaged with the State Employment Service, municipal authorities, entrepreneurs' associations and other public organizations involved in the project at local level.

I believe that the overall outputs speak for themselves:

1. Career transition courses in 14 areas of expertise were provided to 3731 persons, of which 26 percent is accounted for by eligible Family members.
2. Two thirds of target persons obtained employments within three months after undergoing career transition courses, and the remaining one third found employments within 12 months.
3. A Network of social readjustment projects has been set up to include Crimea, Zaporizhzhia Region, Mykolayiv Region and the city of Kiev, enabling domestic and international social projects to be fulfilled to best effect.
4. Five Ukrainian universities entered an international university alliance; two Ukrainian universities set up joint master's training and academic staff training programs.

Basically, it might be emphasized that universities in Ukraine and Norway are expanding cooperation in education and scientific research. The project helped to improve Norway's reputation in Ukraine as a partner country in handling social problems. The Norway-Ukraine Chamber of Commerce was set up in 1998 with a mission to forge bilateral economic cooperation. Due to the good results achieved under the project, the Agreement was signed for the period up to the end of 2014.

Upon an evaluation of human and financial resources management,

IF INTERNATIONAL PROGRAMS AND PROJECTS WILL NO LONGER WORK IN UKRAINE, MILITARY PERSONNEL AND THEIR FAMILY MEMBERS WILL NOT BE ABLE TO EXERCISE THEIR LEGITIMATE RIGHTS. UKRAINE WILL CONSEQUENTLY BE LEFT WITHOUT A «LIGHTNING ROD» THAT PROTECTS ITS REPUTATION IN THE EYES OF OWN ARMED FORCES AT THE TIME OF DRASTIC PERSONNEL REDUCTIONS

carried out in March 2011, the independent consulting center NORDIC CONSULTING GROUP (www.ncg.no) found the project to be effective and recommended that it should be expanded further.

DE: How the project is evaluated by military retirees and their Family members who underwent training under the SAMP project?

VR: It should be emphasized that the project employs a comprehensive approach that enables a more effective military-to-civilian transition for the target persons and their Family members. It particularly includes preliminary work at military units; the selection of candidates for training, career transition assistance, psychological rehabilitation, promotion of employment and business startup training. We carry out trainee surveys prior to the start of and during the training course so that to be able to respond quickly to any requirements that may arise in the running of the project. As a result, we have the outputs as follows: more than 80 percent of target persons involved in the project spoke very highly of the quality of the events under the project, and 20 percent are fully satisfied with their participation in the project.

DE: How far do you think it's important to fulfill the bilateral project on military-to-civilian transition assistance for Armed Forces Reserve retirees?

VR: Ukraine's Armed Forces and other security sector institutions are in for major personnel reductions; a state program on social readjustment and career transition assistance for military personnel is currently under development. Considering the difficult economic situation in Ukraine, it's highly unlikely that funding for the state program will be provided in full. In Ukraine, there are currently three ongoing programs on career transition assistance for military personnel: these are Ukraine-Norway, NATO's and OSCE's. Even though, the three programs put together cover only 10 percent of the current requirement for career transition assistance for military personnel.

The Ukraine-Norway Project has a good outlook in this regard. This is the only project that is working towards forging bilateral cooperation between the two countries, in addition to handling its prime task of promoting military-to civilian transition. Thus, the project needs to be continued and expanded in a comprehensive way.

On the Left side: Jostein Bernhardsen, Ambassador of Norway in Ukraine (2001 – 2006), on the right side: Frode Mellemvik, Rector of the University of Bod (during a visit to the Taurida National V.I.Vernadsky University (Simferopol, July 2005)

DE: How does the situation stand now with respect to the three programs that you've mentioned – NATO's, OSCE's and Ukraine-Norway? What will be the consequences for ordinary Ukrainians and the country as a whole if those programs are closed down?

VR: NATO's program 2013 consisted of two parts. The latter part was the responsibility of a Trust Fund that was set up by NATO countries and supported the operation of Khmelnytsky Regional Center for Veterans' Training and Employment at the 'Podillya' University of Technology. That center became a truly effective partner to the international projects. It will not be funded beginning in 2014. The OSCE's program tends to phase out, its functions being transferred to the State Program of Ukraine. The NATO's program is reviewed and approved on a year-by-year basis. NATO leaders insist that Ukraine must participate on a partnership basis in supporting the military-to-civilian transition effort by way of funding the State program. But ...

The "Ukraine - Norway" program, in contrast to other programs, was launched in 2003, thanks to a joint initiative by the then Ambassador of Norway to Ukraine, Jostein Bernhardsen and the Rector of the University of Nordland, Professor Frode Mellemvik. In that project, the IFAS came out as the sponsor and organizer on Ukraine's part, because by that time it had accumulated sufficient expertise and resources.

If international programs and projects will no longer work in Ukraine, military personnel and their Family members will not be able to exercise their legitimate rights. Ukraine will consequently be left without a "lightning rod" that protects its reputation in the eyes of own

Armed Forces at the time of drastic personnel reductions.

DE: What kind of problems does your Foundation encounter while working on the project? Do the government agencies fully understand all the complexity of the issue?

VR: The principal difficulty is the never ending transfer of responsibility for that issue from one government agency to another, as well as the lack of consistency in the Ministry of Defense of Ukraine's attitude. Our Foundation has been involved in handling challenges of that kind in different countries. We are well understood and helped in Hungary, Bulgaria, Moldova and Belarus. It was difficult for us to work in Russia.

Judge for yourself: the first edition of state program on military-to-civilian transition assistance for retired Armed Forces officers and Armed Forces Reserve retirees was approved in 1996. That same year saw the establishment of the first government agency -- the National Coordinating Center (NCC) -- responsible for the implementation of the State Program. The government agency was created, but funding for the program, unfortunately, was not there. During 1996 – 2005, there were lots of government decisions regarding the change of status of the NCC or expanding its range of powers. But the main thing - the funding for the State Program on Social Adaptation – was lacking. The problem was solved in part due to foreign aid: Projects TACIS (EDUK 9301) in 1996 and (SCRE 1/42) in 2000, NATO's in 2001-2004, (the project is still active,) Ukrainian-British project of 2002 – 2003, The "Ukraine - Norway" project (active from 2003) and the OSCE's Project (active from 2004).

On the Right side: LCol H kon L KEN, Defence Attach at the Embassy of Norway in Ukraine (fall, 2012)

At the time, it seemed to all that a social adaptation system in Ukraine, although created and operating with money from foreign donors, but still it worked. However, in 2005, the NCC was wrapped up by a Ukrainian President's decree. Instead, the State Department for readjustment of military personnel and conversion of former military facilities was set up within the structure of the Ministry of Defense of Ukraine. Throughout this period, state program on readjustment of military personnel was absent, even though the Law of 15th June 2004 on "State guarantees for military personnel who retired from active service in connection with the reform of the Ukrainian Armed Forces, and their Family members," gives military personnel the right to free social and career transition assistance.

The laws were effective at the time and remain effective today, but no budget support for implementation of the laws has been disbursed.

The State Department for readjustment and conversion lasted until the end of 2011; not having received funds earmarked for government programs, and having experienced a succession of four heads of Department, it was dismissed. As a matter of fact, the Ministry of Defense has distanced itself from participation in problems of military-to-civilian transition of retired military service members, although, under and pursuant to the Law of Ukraine # 2011-XII of 20th December 1991, readjustment of military personnel should begin 12 months prior to their actual retirement date. Who will now be in charge of arranging for readjustment events in a military unit?

To address this issue of State importance, a division of social and career transition of military retirees was established in the structure of the Department for Social Protection of Victims of the Chernobyl Disaster and other Categories at the Ministry of Social Policy of Ukraine. The division employs a staff of six. In other words, officers of the Armed Forces and other security sector institutions of Ukraine who have retired to pension or for the purpose of enlistment in a reserve component are subsumed into "other categories" in the list of individuals eligible for benefits, following the victims of the Chernobyl disaster.

The Foundation has met with understanding and support for its activities at all levels of government. There is only one single problem: the lack of institutional and financial support required for the State to be able to comply with its obligations under the applicable laws.

DE: How could You evaluate the overall level of cooperation between Ukraine and Norway? Does

Norway show understanding and interest in forging bilateral cooperation? Is an expansion of cooperation possible in the future, and in what areas?

VR: In November 2012, Ukrainian Prime Minister, Mykola Azarov paid his first official visit to Norway. Speaking at a business forum in Oslo, he noted that the potential for cooperation between Norway and Ukraine was far from exhausted, and suggested that the amount of cooperation be increased tenfold.

I think this to be very realistic. Good business-like relations between Norwegian and Ukrainian partners have been established; we are in many ways united by our common historical past. However, at present, Norway is not seen on the list of Ukraine's biggest economic cooperation partners, taking a rank of 31 out of 124 investor countries. Key product types exported by Ukraine to Norway include: ship hulls (30% of the total exports), chemical products (26% of the total exports); livestock feed; vegetable fats and oils; clothing; metallurgical products; and grain.

Main items of export from Norway to Ukraine include fish (90% of the total export revenues from Norway); agricultural and general industrial machinery and equipment, electrical appliances.

I believe that cooperation between our two countries could expand to include the following areas (simultaneously with forging cooperation in the already existing areas of interest):

1. The growth of the program on social readjustment of military personnel and their Family members toward job creation for target individuals by way of establishing joint ventures in the following areas: renewable energy; waste recycling; equipment and operation of marinas; processing and storage of marine products; storage and marketing of fertilizers; telecommunications; the transfer of experience in supporting small businesses among the military retirees community, which Norway applied to the Republic of Serbia.
2. Cooperation in the field of education and scientific research; joint training of specialists in energy management and sustainable development.
3. Ecology and environmental protection.
4. The development of small cities and towns under conditions where township-forming enterprises are being closed down and military units disbanded.

Jon Elvedal Fredriksen, Ambassador of Norway in Ukraine

DE: How do You evaluate the possibility of stepping up carrier transition assistance programs for Armed Forces Reserve retirees, considering the steep reduction of the Ukrainian Armed Forces personnel?

VR: I don't really believe in positive outlook with respect to intensification of career transition assistance programs for military personnel, because no signs of intensification can be observed.

In Ukraine, there is the potential for that challenge to be effectively handled. There are professionals, educational institutions and non-governmental organizations with experience in working with this individual category. The principal difficulty is a time limit available to get the business started. If the process continues to evolve at the same pace as it was during the previous twenty years, we are facing a very difficult time. After all, the main problem for those being retired is the lack of housing and a source of sustained income necessary for covering all the expenses the military officer and his family members have to pay at the time of retirement. But in this case, military personnel have professional military skills and knowledge. This must be kept in mind by the officials in charge of arranging for events under the laws securing the rights of retired military personnel and their Family members. UDR

Interviewed by **Anton Mikhnenko**, UDR

BASICALLY, IT MIGHT BE EMPHASIZED THAT UNIVERSITIES IN UKRAINE AND NORWAY ARE EXPANDING COOPERATION IN EDUCATION AND SCIENTIFIC RESEARCH. THE PROJECT HELPED TO IMPROVE NORWAY'S REPUTATION IN UKRAINE AS A PARTNER COUNTRY IN HANDLING SOCIAL PROBLEMS

THE STATE COMPANY FOR EXPORT AND IMPORT OF MILITARY AND SPECIAL PRODUCTS AND SERVICES "UKRSPECEXPORT"

UKRSPECEXPORT

- Export and import of defence and special purpose products and services, including weapons, ammunition, explosives, military and special materiel, spare parts and components, other products used for development and manufacture of armament and military

- Repair services, maintenance, overhaul and modernization of armament and military equipment;

- Export of up-to-date technologies, design documentation and other research and development products of military.

- Marketing, engineering, consulting and mediating services in the sphere of foreign trade in armament and military equipment;

- Education and training of foreign specialists at military educational establishments of Ukraine and abroad.

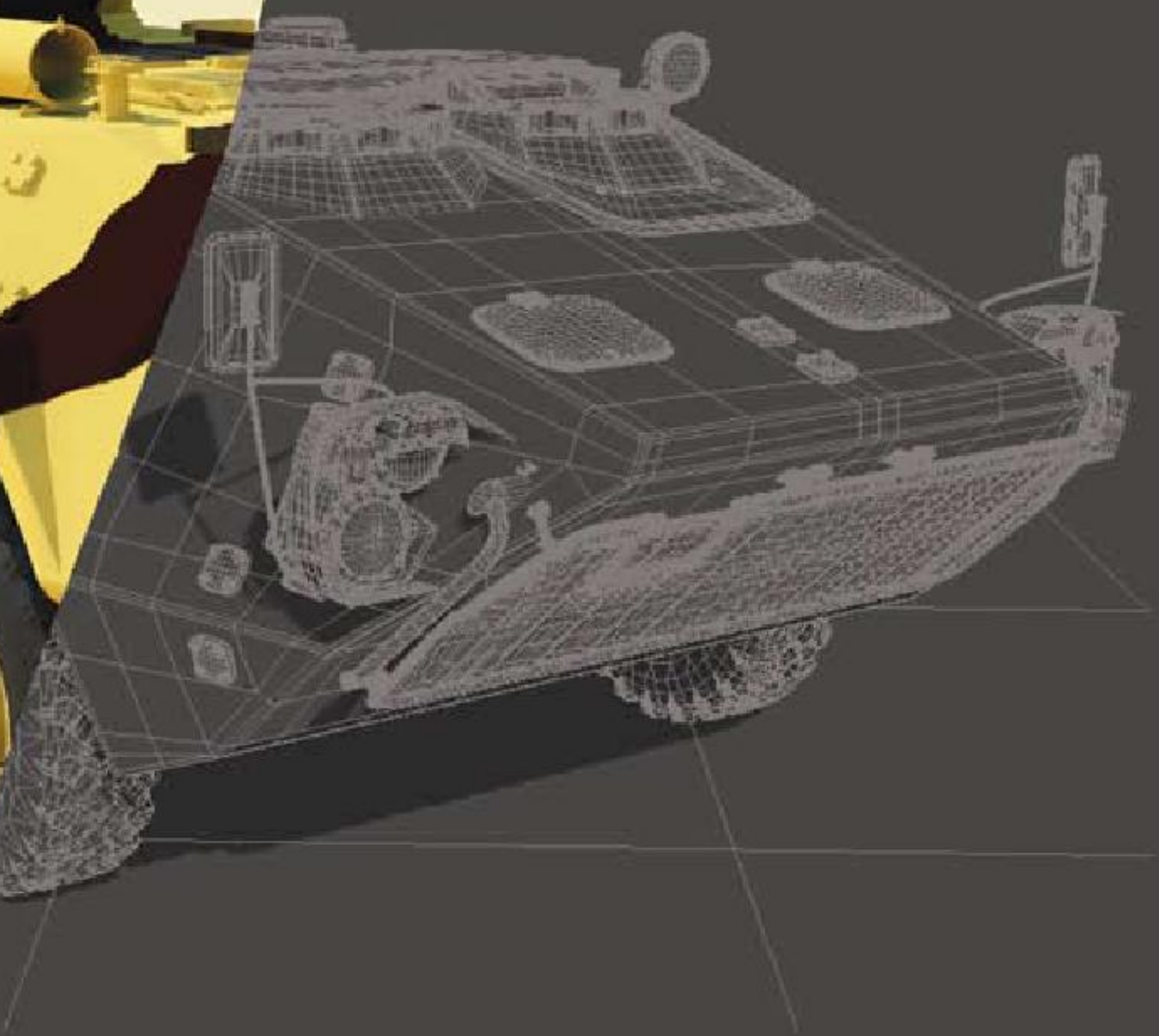

Foreign representative offices:

People's Republic of China

Islamic Republic of Pakistan

Arab Republic of Egypt

Republic of India

36, Dehtiarivska St., Kyiv, 04119, Ukraine
Tel.: +380 44 461 94 27, +380 44 461 94 35
Fax: +380 44 489 07 58, +380 44 461 97 59
E-mail: aira@ukrspecexport.com, adv@use.ua

www.use.ua